CUTMASTER® 60i
PLASMA CUTTING SYSTEM

OPERATING MANUAL



Art # A-14032

SL60QD	OUTPUT	MAX OUTPUT	VOLTAGE	INPUT POWER
	DC	60 AMPS	400V	3 PHASE

CE

Revision: AA	Issue Date: 15 February, 2019	Manual No.: 0-5562

WARNING
Cancer and Reproductive Harm
www.P65Warnings.ca.gov
Wash hands after handling.

esab.com

EU DECLARATION OF CONFORMITY

According to
The Low Voltage Directive 2014/35/EU, entering into force 20 April 2016
The EMC Directive 2014/30/EU, entering into force 20 April 2016
The RoHS Directive 2011/65/EU, entering into force 2 January 2013

Type of equipment
PLASMA CUTTING SYSTEM

Type designation etc.
CutMaster 60i, from serial number MX1723XXXXXX

Brand name or trade mark
ESAB

Manufacturer or his authorised representative

Name, address, telephone No:

ESAB Group Inc.
2800 Airport Rd
Denton TX 76207 USA
Phone: +01 800 426 1888, FAX +01 603 298 7402

The following harmonised standard in force within the EEA has been used in the design:

IEC/EN 60974-1:2012 Arc Welding Equipment - Part 1: Welding power sources.
IEC/EN 60974-10:2014 + AMD 1:2015 Published 2015-06-19 Arc Welding Equipment - Part 10: Electromagnetic compatibility (EMC) requirements

Additional Information: Restrictive use, Class A equipment, intended for use in location other than residential.

By signing this document, the undersigned declares as manufacturer, or the manufacturer's authorised representative , that the equipment in question complies with the safety requirements stated above.

Date	**Signature**	**Position**
9 June, 2017	Flavio Santos	General Manager Accessories and Adjacencies

CE 2017

TABLE OF CONTENTS

SECTION 1: GENERAL INFORMATION....11
1.01Notes, Cautions and Warnings....11

SECTION 1 : INFORMATIONS GÉNÉRALES....13
1.01Remarques, avertissements et mises en garde....13

SECTION 2 SYSTEM: INTRODUCTION....15
2.01How To Use This Manual....15
2.02Equipment Identification....15
2.03Receipt Of Equipment....15
2.04Power Supply Specifications....16
2.05Input Wiring Specifications....18
2.06Power Supply Features....19

SECTION 2 TORCH: INTRODUCTION....21
2T.01Scope of Manual....21
2T.02General Description....21
2T.03Specifications....21
2T.04Quick Connection Torch....22

SECTION 3 SYSTEM: INSTALLATION....23
3.01Unpacking....23
3.02Lifting Options....23
3.03Opening the Main Switch Cover....23
3.04Primary Input Power Connections, 3 Phase....24
3.05Gas Connections....24
3.06Work Lead Connections....27

SECTION 3 TORCH: INSTALLATION....29
3T.01Torch Connections....29
3T.02Setting Up Mechanical Torch....29

SECTION 4 SYSTEM: OPERATION....31
4.01Front Panel Controls / Features....31
4.02Preparations for Operation....34

SECTION 4 TORCH: OPERATION....39
4T.01Torch Parts Selection....39
4T.02Hand Torch Operation....39
4T.03Gouging....42
4T.04Mechanized Torch Operation....43
4T.05Recommended Cutting Speeds With Exposed Tip....45
4T.06Recommended Cutting Speeds With Shielded Tip....48

TABLE OF CONTENTS

PATENT INFORMATION 51

SECTION 5 SYSTEM: SERVICE 53
5.01General Maintenance 53
5.02Maintenance Schedule 53
5.03Common Faults 54
5.04Fault Indicator 55
5.05Basic Troubleshooting Guide 56
5.06Power Supply Basic Parts Replacement 59

SECTION 5 TORCH: SERVICE 63
5T.01General Maintenance 63
5T.02Inspection and Replacement of Consumable Torch Parts 64

SECTION 6: PARTS LISTS 65
6.01Introduction 65
6.02Ordering Information 65
6.03Power Supply Replacement 65
6.04Replacement Power Supply Parts 66
6.05Options and Accessories 66
6.06External Replacement Parts (Plastic) 67
6.07Replacement Parts for Hand Torch 68
6.08Torch Consumable Parts (SL60) 69
6.09Torch Consumable Parts (SL100) 70

APPENDIX 1: DATA TAG INFORMATION 71

APPENDIX 2: TORCH PIN - OUT DIAGRAMS 72

APPENDIX 3: TORCH CONNECTION DIAGRAMS 73

APPENDIX 4: PUBLICATION HISTORY 74

2.01 How To Use This Manual

This Owner's Manual applies to just product(s) listed on page i.

To ensure safe operation, read the entire manual, including the chapter on safety instructions and warnings.

Additional copies of this manual may be purchased by contacting ESAB at the address and phone number in your area listed on back cover of this manual. Include the Operating Manual number and equipment identification numbers.

Electronic copies of this manual can also be downloaded at no charge in Acrobat PDF format by going to the ESAB web site listed below and clicking on "Product Support" / "ESAB Documentation": / "Download Library", then navigate to "Plasma Equipment" and then "Manual".

http://www.esab.com

2.02 Equipment Identification

The unit's identification number (specification or part number), model, and serial number usually appear on a data tag attached to the bottom. Equipment which does not have a data tag such as torch and cable assemblies are identified only by the specification or part number printed on loosely attached card or the shipping container. Record these numbers on the bottom of page i for future reference.

2.03 Receipt Of Equipment

When you receive the equipment, check it against the invoice to make sure it is complete and inspect the equipment for possible damage due to shipping. If there is any damage, notify the carrier immediately to file a claim. Furnish complete information concerning damage claims or shipping errors to the location in your area listed on the back cover of this manual.

Include all equipment identification numbers as described above, along with a full description of the parts in error.



Included items:

- 60i Power Supply
- SL60QD™ Torch and Leads
- Work Lead with Work Clamp
- Spare Parts Kit (2 Electrodes, 2 Tips, 1 Shield cup)
- Operating Manual
- Filter Wrench

Move the equipment to the installation site before un-boxing the unit. Use care to avoid damaging the equipment when opening the box.

2.04 Power Supply Specifications

2.04.01 3 Phase

60i 208 - 480 VAC 3 Phase Power Supply Specifications	
Input Power	208 - 480 VAC(187 - 528 VAC), 3 Phase, 50/60 Hz
3 Phase Input Power Cable	Power Supply includes 9' three phase 12AWG 4/C input cable without plug.
Output Current	10 - 60 Amps, Continuously Adjustable
Power Supply Gas Filtering Ability	Particulates to 5 Microns
Maximum Inlet Pressure	125 PSI (8.6 bar)

60i 400 VAC 3 Phase CE Power Supply Specifications	
Input Power	400 VAC, 3 Phase, 50/60 Hz
3 Phase Input Power Cable	Power Supply includes 9' three phase 12AWG 4/C input cable with plug.
Output Current	10 - 60 Amps, Continuously Adjustable
Power Supply Gas Filtering Ability	Particulates to 5 Microns
Maximum Inlet Pressure	125 PSI (8.6 bar)

2.04.02 Additional Power Supply Specifications

60i Power Supply Duty Cycle *				
Ambient Air Temperature	Duty Cycle Ratings @ 40° C (104° F) Operating Range 0° - 50° C			
		Rating		
All Units	Duty Cycle	50%	60%	100%
	Current	60 Amps	50 Amps	40 Amps
	DC Voltage	126	122	119
* NOTE: The duty cycle will be reduced if the primary input power (AC) is low or the output voltage (DC) is higher than shown in this chart.				

60i Cut Capacity		
Recommended	**Pierce**	**Maximum**
3/4" (19.05mm)	5/8" (15.86mm)	1 1/2" (38mm)

Generator Recommendations

When using generators to power the 60i Plasma Cutting System, the following ratings are a minimum and are to be used along with the ratings listed above.

A60i Generator Specifications		
Generator Output Rating	**60i Output Current**	**Arc Characteristic**
15 kW	60A	Full
12 kW	60A	Limited
	45A	Full
10 kW	45A	Limited
	30A	Full

NOTE!
Due to circuitry, age and condition two generators with the same ratings may produce different results. Adjust the amperage accordingly.

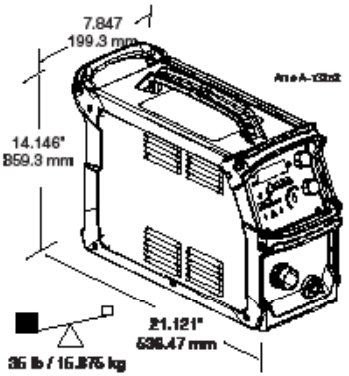

Power Supply Dimensions & Weight

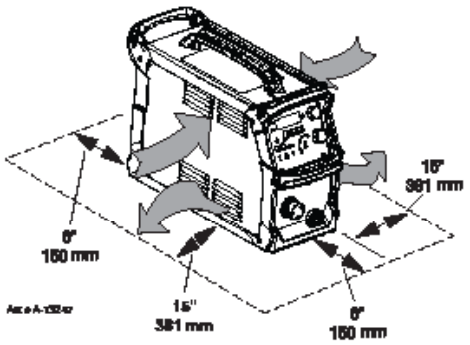

Ventilation Clearance Requirements

2.05 Input Wiring Specifications



WARNING
Each CutMaster 60i system is a dedicated 1 Phase OR 3 Phase system and cannot be reconfigured to the other. Personal injury could occur if changing the phase is attempted.

3 Phase

3 Phase CutMaster 60i Power Supply Input Cable Wiring Requirements							
	Input voltage	Freq	Power Input			Suggested Sizes	
	Volts	Hz	kVA	I max	I_1eff	Fuse (amps)	Flexible Cord (Min. AWG)
3 Phase	208	50/60	9.1	26	18.5	40	12 AWG (2.5mm^2)
	230	50/60	9.1	23.3	16.5	30	12 AWG (2.5mm^2)
	380	50/60	8.9	13.8	9.8	20	14 AWG (2.5mm^2)
	400	50/60	8.9	13.2	9.4	20	14 AWG (2.5mm^2)
	415	50/60	9.1	12.8	9.1	20	16 AWG (1.5mm^2)
	480	50/60	9.2	11.3	8.0	15	16 AWG (1.5mm^2)
Line Voltages with Suggested Circuit Protection and Wire Sizes Based on National Electric Code and Canadian Electric Code							

Three Phase



NOTE!
Refer to Local and National Codes or local authority having jurisdiction for proper wiring requirements. Cable size is de-rated based on the Duty Cycle of the equipment.

2.06 Power Supply Features

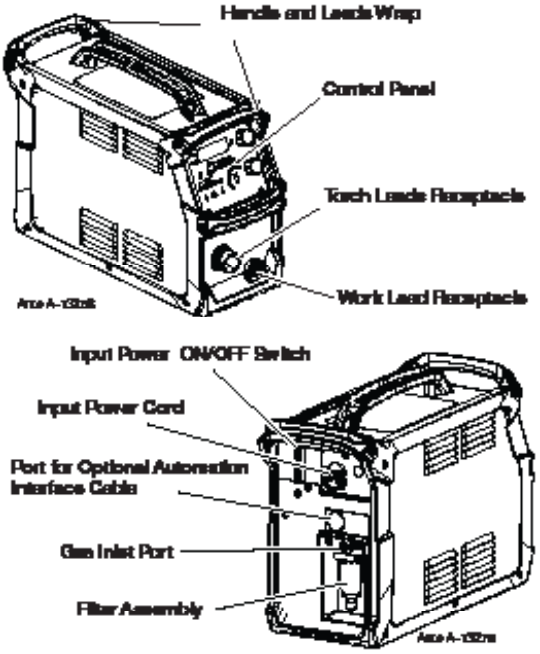

SECTION 2 TORCH: INTRODUCTION

2T.01 Scope of Manual

This manual contains descriptions, operating instructions and maintenance procedures for the 1Torch Models SL60, SL60QD™ and SL100/ Mechanized Plasma Cutting Torches. Service of this equipment is restricted to properly trained personnel; unqualified personnel are strictly cautioned against attempting repairs or adjustments not covered in this manual, at the risk of voiding the Warranty.

Read this manual thoroughly. A complete understanding of the characteristics and capabilities of this equipment will assure the dependable operation for which it was designed.

2T.02 General Description

CAUTION
Torch Leads are flexible but internal wires can be broken. Do not exceed a 2" radius bend and avoid repeated tight bends when possible.

NOTE!
Refer to Section "4Torch", for a more detailed description of plasma torch operation.

Refer to the Appendix Pages for additional specifications as related to the Power Supply used.

2T.03 Specifications

A. Torch Configurations

1. Hand/Manual Torch, Model SL60QD™

The hand torch head is at 75° to the torch handle. The hand torches include a torch handle and torch trigger assembly.

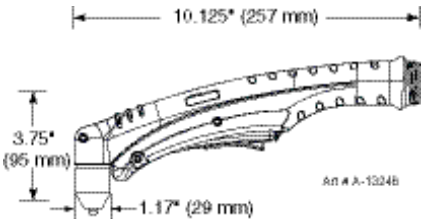

2. Mechanized Torch, Model

The standard machine torch has a positioning tube with rack & pinch block assembly.

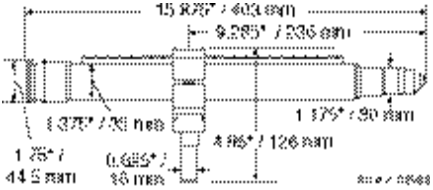

B. Torch Leads Lengths

Hand Torches are available as follows:

- 20 ft / 6.1 m, with ATC connectors
- 50 ft / 15.2 m, with ATC connectors

Machine Torches are available as follows:

- 5 foot / 1.5 m, with ATC connectors
- 10 foot / 3.05 m, with ATC connectors
- 25 foot / 7.6 m, with ATC connectors
- 50 foot / 15.2 m, with ATC connectors

C. Torch Parts

Starter Cartridge, Electrode, Tip, Shield Cup

D. Parts - In - Place (PIP)

Torch Head has built - in switch

15 VDC circuit rating

E. Type Cooling

Combination of ambient air and gas stream through torch.

F. Torch Ratings

Manual Torch Ratings	
Ambient Temperature	104° F 40° C
Duty Cycle	100% @ 60 Amps @ 400 scfh
Maximum Current	60 Amps
Voltage (V_{peak})	500V
Arc Striking Voltage	500V

Mechanized Torch Ratings	
Ambient Temperature	104° F 40° C
Duty Cycle	100% @ 100 Amps @ 400 scfh
Maximum Current	120 Amps
Voltage (V_{peak})	500V
Arc Striking Voltage	500V

G. Gas Requirements

Manual and Mechanized Torch Gas Specifications	
Gas (Plasma and Secondary)	Compressed Air
Operating Pressure Refer to NOTE	90 - 120 psi 6.2 - 8.3 bar
Maximum Input Pressure	125 psi / 8.6 bar
Gas Flow (Cutting and Gouging)	5 - 8.3 SCFM 300 - 500 scfh 142 - 235 lpm

WARNING
This Torch is not to be used with oxygen (O_2). The SL60QD torch should not be used on an HF system.

NOTE!
Operating pressure varies with torch model, operating amperage, and torch leads length. Refer to gas pressure settings charts for each model.

H. Direct Contact Hazard

For standoff tip the recommended standoff is 3/16 inches / 4.7 mm.

2T.04 Quick Connection Torch

The new SL60QD™ (Quick Disconnect) torch allows for a quick change of the torch handle assembly from the leads. To change the torch handle assembly do the following.

1. Remove the torch handle assembly by grasping the torch handle in one hand and the coupler nut and leads in the other.
2. Rotate the nut a minimum of one full turn to the left (counter clockwise) and pull the torch handle assembly out from the leads in a straight line.
3. To reattach, grasp both as before and carefully align the internal connecting parts.
4. Carefully press the two together in a straight line.
5. Align the mark on the coupler nut with that on the top of the torch handle and rotate to the right (clockwise) drawing the two together and seating the connections inside. Do not use tools to tighten.

3.01 Unpacking

1. Use the packing lists to identify and account for each item.
2. Inspect each item for possible shipping damage. If damage is evident, contact your distributor and / or shipping company before proceeding with the installation.
3. Record Power Supply and Torch model and serial numbers, purchase date and vendor name, in the information block at the front of this manual.

3.02 Lifting Options

The Power Supply includes handles for hand lifting only. Be sure unit is lifted and transported safely and securely.

WARNING
Do not touch live electrical parts.
Disconnect input power cord before moving unit.
FALLING EQUIPMENT can cause serious personal injury and can damage equipment.
HANDLES are not for mechanical lifting.

- Only persons of adequate physical strength should lift the unit.
- Lift unit by the handles, using two hands. Do not use straps for lifting.
- Use optional cart or similar device of adequate capacity to move unit.
- Place unit on a proper skid and secure in place before transporting with a fork lift or other vehicle.

3.03 Opening the Main Switch Cover

Systems are configured for and come with power cord connected for single phase or three phase configuration depending on system purchased. The input power switch is located on the rear panel along the top. To access the input locations, remove the screw at the top of the cover and flip down.

WARNING
Disconnect power before removing the cover.

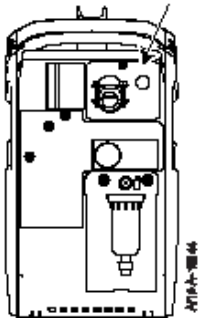

Main Switch Cover

3.04 Primary Input Power Connections, 3 Phase

3 Phase

WARNING
Each CutMaster 60i system is a dedicated 1 Phase OR 3 Phase system and cannot be reconfigured to the other. Personal injury could occur if changing the phase is attempted.

CAUTION
The primary power source, fuse, and any extension cords used must conform to local electrical code and the recommended circuit protection and wiring requirements as specified in Section 2.

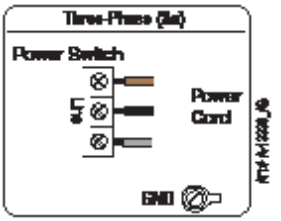

Three Phase Input Power Wiring

NOTE!
As long as the power supply is connected to input power ranging from 208 VAC to 480 VAC, the system will automatically detect this and run accordingly.

3.05 Gas Connections

Connecting Gas Supply to Unit

The connection is the same for compressed air or high pressure cylinders. Refer to the following two subsections if an optional air line filter is to be installed.

1. Connect the air line to the inlet port. The illustration shows typical fittings as an example.

NOTE!
For a secure seal, apply thread sealant to the fitting threads, according to manufacturer's instructions. Do not use Teflon tape as a thread sealer, as small particles of the tape may break off and block the small air passages in the torch.

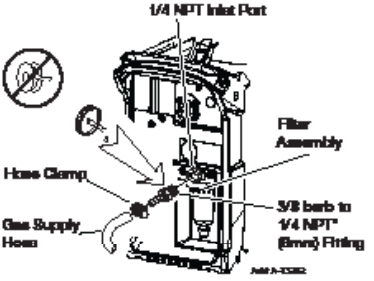

Air Connection to Inlet Port

NOTE!
Filter replacement part numbers can be found in Section 6 of this manual.

Installing Optional Single - Stage Air Filter

An optional filter kit (7-7507) is recommended for improved filtering with compressed air, to keep moisture and debris out of the torch.

1. Attach the Single - Stage Filter Hose to the Inlet Port 1/4" NPT of the system filter.
2. Attach the Filter Assembly to the filter hose.
3. Connect the air line to the Filter using the 1/4" NPT. The illustration shows typical fittings as an example.

NOTE!
For a secure seal, apply thread sealant to the fitting threads, according to manufacturer's instructions. Do not use Teflon tape as a thread sealer, as small particles of the tape may break off and block the small air passages in the torch.

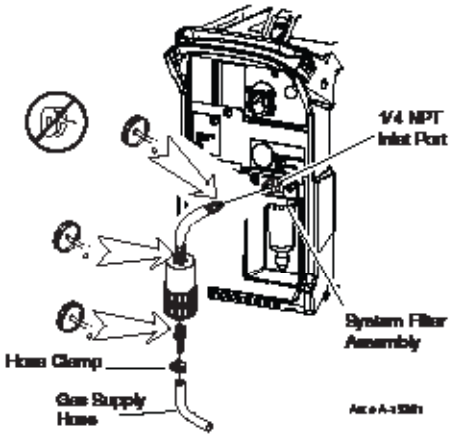

Optional Single - Stage Filter Installation

NOTE!
Filter replacement part numbers can be found in Section 6 of this manual

Installing Optional Two - Stage Air Filter Kit

This optional two - stage air line filter (9-9387) is also for use on compressed air shop systems. Filter removes moisture and contaminants to at least 5 microns.

Connect the air supply as follows:

1. Attach the Two Stage Filter bracket to the back of the power supply with the screws supplied.

> **NOTE!**
> For a secure seal, apply thread sealant to the fitting threads, according to manufacturer's instructions. Do not use Teflon tape as a thread sealer, as small particles of the tape may break off and block the small air passages in the torch.

2. Connect the two stage filter outlet hose to the inlet port of the Regulator / Filter Assembly.
3. Use customer - supplied fittings to connect the air line to the Filter. A 5/16" (8mm) O.D. smooth tubing should be used with the press in fitting.

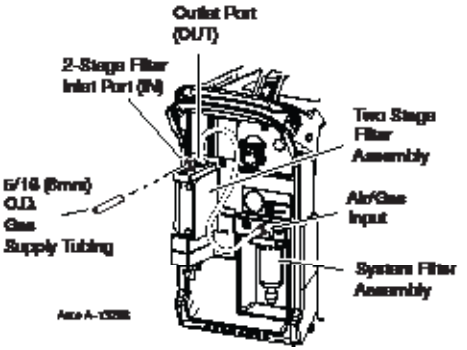

Optional Two - Stage Filter Installation

> **NOTE!**
> Filter replacement part numbers can be found in Section 6 of this manual

Using High Pressure Air Cylinders

When using high pressure air cylinders as the air supply:

1. Refer to the manufacturer's specifications for installation and maintenance procedures for high pressure regulators.
2. Examine the cylinder valves to be sure they are clean and free of oil, grease or any foreign material. Briefly open each cylinder valve to blow out any dust which may be present.
3. The cylinder must be equipped with an adjustable high - pressure regulator capable of outlet pressures up to 120 psi (8.3 bar) maximum and flows of least 300-500 scfh / 5 - 8.3 CFM (142-235 lpm).
4. Connect supply hose to the cylinder.

> **NOTE!**
> Pressure should be set at 120 psi (8.3 bar) at the high pressure cylinder regulator.

3.06 Work Lead Connections

Connect the Work Lead to the power supply and the work piece.

1. Attach the Dinse type connection of the work lead to the power supply front panel as shown below. Push in and turn clockwise to the right until tight.

2. Connect the work clamp to the workpiece or cutting table. The area must be free from oil, paint and rust. Connect only to the main part of the work piece; do not connect to the part to be cut off.

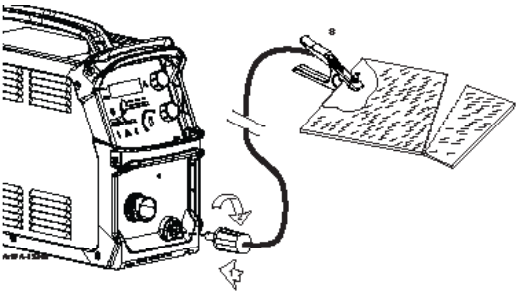

SECTION 3 TORCH: INSTALLATION

3T.01 Torch Connections

If necessary, connect the torch to the Power Supply. Connect only the ESAB model SL60, SL60QD™ or SL100 / Mechanical Torch to this power supply. Maximum torch leads length is 100 feet / 30.5 m, including extensions.

WARNING
Disconnect primary power at the source before connecting the torch.

1. Align the ATC male connector (on the torch lead) with the female receptacle. Push the male connector into the female receptacle. The connectors should push together with a small amount of pressure.
2. Secure the connection by turning the locking nut clockwise until it clicks. DO NOT use the locking nut to pull the connection together. Do not use tools to secure the connection.

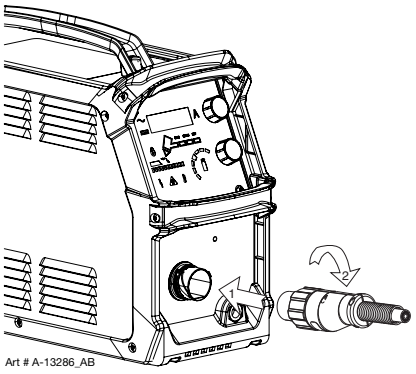

Connecting the Torch to the Power Supply

3. The system is ready for operation.

Check Air Quality

To test the quality of air:

1. Put the ON / OFF switch in the ON (Left) position.
2. Select SET mode.
3. Place a welding filter lens in front of the torch and turn ON the air. **Do not start an arc!** Any oil or moisture in the air will be visible on the lens.

3T.02 Setting Up Mechanical Torch

WARNING
Disconnect primary power at the source before disassembling the torch or torch leads.

The mechanical torch includes a positioning tube with rack and pinch block assembly.

1. Mount the torch assembly on the cutting table.
2. To obtain a clean vertical cut, use a square to align the torch perpendicular to the surface of the workpiece.

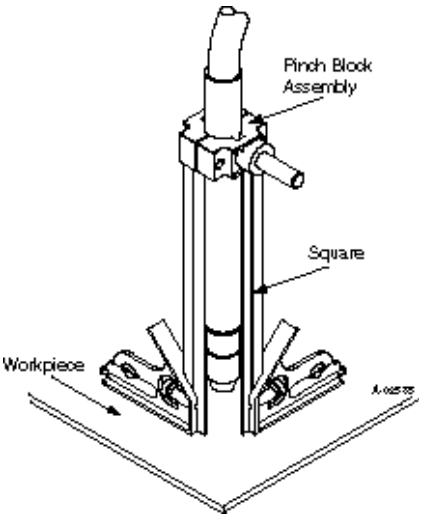

Mechanical Torch Set - Up

3. The proper torch parts (shield cup, tip, start cartridge, and electrode) must be installed for the type of operation. Refer to Section "4T.01 Torch Parts Selection".

4.01 Front Panel Controls / Features

See Illustration for numbering Identification

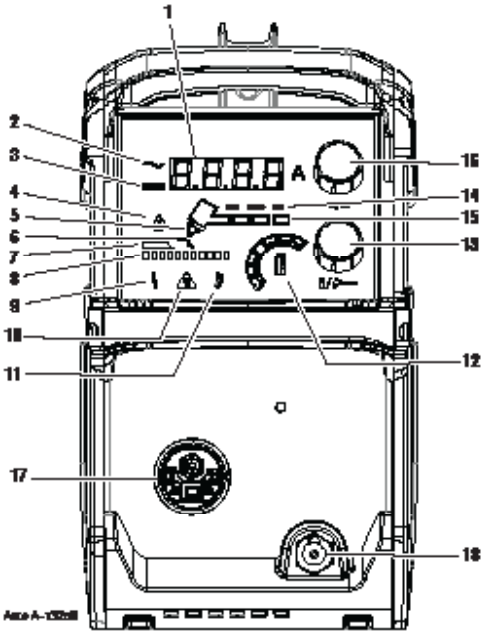

1. **Numeric Display**

   - Displays software revision at start up
   - Displays amperage values (Factory default)
   - Displays error codes
   - Displays pre-set (preview) maintenance functions

2. **AC Indicator**

   Steady light indicates power supply is ready for operation. Blinking light indicates the input voltage is outside of operating range or internal fault.

3. **DC Indicator**

   Indicator is ON when DC output circuit is active.

4. **Latch/Lock**

   Indicator is ON when unit is in "Latch" mode.

5.  **Set Mode Indicator**

Indicator is ON when unit is flowing gas and pressure can be set.

6.  **Shield Cup In Place Indicator**

Indicator is Blinking when any of the following are not in place or connected: Shield Cup, ATC leads or Quick Disconnect.

7.  **Gouge Mode Indicator**

Indicator is ON when unit is in "Gouge" mode and all Cutting Indicators (#8) are illuminated.

8.  **Type of Cutting Indicator**

Different segments will be illuminated to indicate different types of cutting.

• Gouging - All illuminated 

• Normal Cutting and Latch Mode - Center indicator will be OFF. 

• RAR (Rapid Auto Restart) Cutting - Every other indicator will be OFF.


• Set Mode - All indicators will be OFF.

9.  **Fault Indicator**

Indicator is ON when unit is in fault condition. See error codes appendix for fault light explanations. Flashing when active.

Factory default: OFF

10.  **EOL (End Of Life) Indicator**

Indicator is normally OFF. It is also OFF during Drag Cutting.

When on it is to inform user that consumable failure is imminent

Active and/or operable in all cutting modes except Drag.

11.  **Over Temp Indicator**

Indicator is normally OFF. Indicator is ON/FLASHING when internal temperature exceeds normal limits. Let the unit cool before continuing operation.

12.  **Gas Pressure Indicator**

Indicator used to show low, optimal and high gas pressure. Torch type, lead length, cutting mode and amperage should all be set prior to setting the gas pressure. (90 - 125 PSI / 6.2 - 8.6 bar)

One of 7 segments will always be on when unit is on. The gas bottle will be illuminated and flash during a gas pressure fault. Bottle will flash when pressure is below a minimum threshold. Bottle will be on continuously when acceptable.

Factory default: One, or two segments and gas bottle will be illuminated depending on the gas pressure level. The green indicator in the middle indicates the recommended pressure for the process (Amps, torch type, lead length). Different processes have different optimum pressures.

Yellow indicates above or below optimum pressure and red indicates unacceptable pressure for good cutting. Each LED represents 5 psi. Two adjacent LEDs will represent a value in between the two or 2.5 lb. pressure change.

13. Gas Pressure Selector

Rotate the lower knob to set the gas pressure.

14. SL60 SL100 SLV Torch Type Indicator

Used for selecting one of the three torch options and torch length for each. SLV will be automatically detected.

Factory default: On, SL60 which includes SL60QD™ (Quick Disconnect)

Press and release the lower knob without rotating it to step through selection of torch type.

NOTE!
If you have gone past the desired setting, you will need to continue to step through all the other torch types and lengths to get back to return to it.

15. Lead Length Indicator

Used for selecting torch lead length for each torch type ranging between 20' and 100' leads.

Factory default: On, 20'

Press and release the lower knob without rotating it to step through selection of torch type followed by lead length.

Up to 35' Lead (10.7 m)



Above 35' to 50' Lead (15.2 m)



Above 50' to 75' Lead (22.9 m)

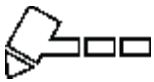

Above 75' to 100' Lead (30.5 m)



NOTE!
If you have gone past the desired setting, you will need to continue to step through all the other torch types and lengths to get back to return to it.

16. Upper Knob - Amp and Mode Selector

Rotate knob to increase or decrease amperage. Indicator **A** is ON when numeric display is showing amperage output.

Press and release knob without turning to step through the different Modes.

Factory default: On

Numeric display 60 A

17. Torch Quick Disconnect Receptacle

Torch Leads are connected here by aligning the connectors, pressing in and turning locking ring clockwise-to-the-right to secure. Connection should only be snug with no tools used.

18. Work Lead Dinse type receptacle

Align Dinse type connector on work lead with receptacle, press in and turn clockwise to the right until tight.

4.02 Preparations for Operation

At the start of each operating session:



WARNING
Disconnect primary power at the source before assembling or disassembling power supply, torch parts, or torch and leads assemblies.

Torch Parts Selection

Check the torch for proper assembly and appropriate torch parts. The torch parts must correspond with the type of operation, and with the amperage output of this Power Supply (60 amps maximum). Refer to Section 4T.07 and following for torch parts selection.

Torch Connection

Check that the torch is properly connected. Only ESAB models SL60, SL60QD™ / Manual or SL100 / Mechanical Torches may be connected to this Power Supply. See Section 3T of this manual.

Check Primary Input Power Source

1. Check the power source for proper input voltage. Make sure the input power source meets the power requirements for the unit per Section 2, Specifications.
2. Connect the input power cable (or close the main disconnect switch) to supply power to the system.

Air Source

Ensure source meets requirements (refer to Section 2). Check connections and turn air supply ON.

Connect Work Cable

Clamp the work cable to the workpiece or cutting table. The area must be free from oil, paint and rust. Connect only to the main part of the workpiece; do not connect to the part to be cut off.

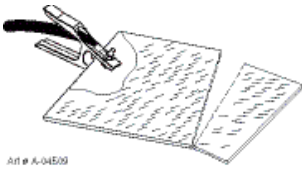

Power ON

Place the Power Supply ON / OFF switch to the ON (right) position. AC indicator turns ON. The Control Board performs several tests to determine the system is ready to operate. During the self-tests the digital display first shows  (revision) followed by the firmware revision number which includes decimals. 1.1.0 is an example of a production released code revision that may be displayed.

Next displayed is the "checksum" a combination of letters and numbers that are unique to the firmware revision. These are used by service personal to determine if the firmware has been corrupted.

If there are no issues detected the output current setting will be displayed with the letter "A" to the right, showing the output current setting. Should a problem be detected the fault code in the format Exxx will display and the "A" will not be illuminated. Refer to Section 5.04 for fault code explanations.



Gas indicator turns ON if there is sufficient gas pressure for power supply operation and the cooling fan turns ON. (90 - 125 PSI / 6.2 - 8.6 bar)

NOTE!
Minimum pressure for power supply operation is lower than minimum for torch operation.

The cooling fan will turn ON as soon as the unit is turned ON. After a short amount of time the fan switches to low speed. The fan will return to high speed as soon as the torch switch (Start Signal) is activated or if the unit is turned OFF, then turned ON again. If an over temperature condition occurs, the fan will continue to run at high speed while the condition exists and for a five (5) minute period once the condition is cleared.

Select Cutting Mode

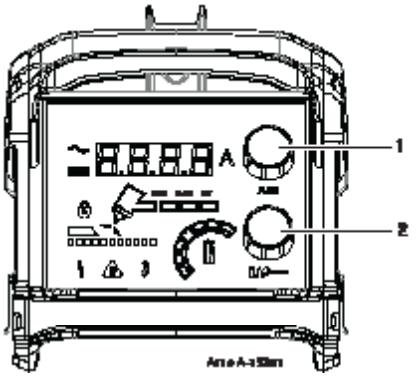

1. Press and release the upper knob without turning to enter the mode selection menu. Place the system in one of the four cutting modes available by pressing and releasing the knob until you reach the desired mode.:

RUN

LATCH .

RAPID AUTO RESTART

GOUGE

SET/PURGE (gas flow only)

2. After selecting the cutting mode, set the output current by turning the knob.

Set Torch Parameters

1. Press and release the bottom knob without rotating to enter the torch type and leads length selections.

Set Operating Pressure

> **NOTE!**
> Before the gas pressure is set, the torch type, leads length, type of cutting and amperage should all be set as they will affect the pressures required. If any of those are changed, the pressure should be checked again to make sure it is optimized.

1. Gas pressure must be set in the cutting mode to be used, not in the SET/PURGE mode. Each mode may require a different pressure for optimal cutting. (90 - 125 PSI / 6.2 - 8.6 bar)

2. Set the gas pressure/flow using the lower knob, 2. Changes will show on the Gas Pressure Interlock.  The green indicator in the center is the ideal setting. Each indicator when lit separately is equal to 5 lbs. from the segment next to it. Each will show 5, 10, or 15 lbs or more below or above the ideal. When two segments are illuminated together then the change is half as much or 2.5 lbs. The pressure settings will all be affected by the other settings for torch, torch length and type of cutting and will require adjustments to the pressure setting.

Cutting Operation

When the torch leaves the workpiece during cutting operations in the RUN mode, there is a brief delay in restarting the pilot arc. With the system in the RAPID AUTO RESTART mode, when the torch leaves the workpiece the pilot arc restarts instantly, and the cutting arc restarts instantly when the pilot arc contacts the workpiece. (Use the 'Rapid Auto Restart' mode when cutting expanded metal or gratings, or trimming operations when an uninterrupted restart is desired).

With the system in the LATCH mode the main cutting arc will be maintained after the torch switch is released. To exit or cancel the LATCH mode, press and release the trigger again or lift the torch from the cutting surface so the arc goes out.

Typical Cutting Speeds

Cutting speeds vary according to torch output amperage, the type of material being cut, and operator skill. Refer to Section "4T.08 Recommended Cutting Speeds With Exposed Tip" and following for greater details.

Output current setting or cutting speeds may be reduced to allow slower cutting when following a line, or using a template or cutting guide while still producing cuts of excellent quality.

Postflow

Release the trigger to stop the cutting arc. Gas continues to flow for approximately 20 seconds. During post - flow, if the user moves the trigger release to the rear and presses the trigger, the pilot arc starts. The main arc transfers to the workpiece if the torch tip is within transfer distance to the workpiece.

Shutdown

Turn the ON / OFF switch to OFF, to the left as you face the unit from the rear. After a short delay all Power Supply indicators and fan shut OFF. Unplug the input power cord or disconnect input power. Power is removed from the system.

NOTE!
To maximize the longevity of the internal electronics, allow the power supply to continue running (without cutting) until the cooling fan speed changes to slow. This may take a few minutes.

4T.01 Torch Parts Selection

Depending on the type of operation to be done determines the torch parts to be used.

Type of operation:

Drag cutting, standoff cutting or gouging

Torch parts:

Shield Cup, Cutting Tip, Electrode and Start Cartridge

NOTE!
Refer to Section 4T.07 and following for additional information on torch parts.

Change the torch parts for a different operation as follows:

WARNING
Disconnect primary power at the source before assembling or disassembling torch parts, or torch and leads assemblies.

NOTE!
The shield cup holds the tip and start cartridge in place. Position the torch with the shield cup facing upward to keep these parts from falling out when the cup is removed.

1. Unscrew and remove the shield cup assembly from the torch head.
2. Remove the Electrode by pulling it straight out of the Torch Head.

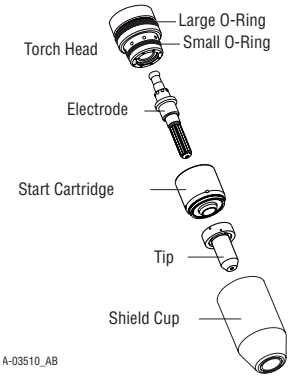

Torch Parts

3. Install the replacement Electrode by pushing it straight into the torch head until it clicks.
4. Install the start cartridge and desired tip for the operation into the torch head.
5. Hand tighten the shield cup assembly until it is seated on the torch head. If resistance is felt when installing the cup, check the threads before proceeding.

4T.02 Hand Torch Operation

Standoff Cutting With Hand Torch

NOTE!
For best performance and parts life, always use the correct parts for the type of operation.

1. The torch can be comfortably held in one hand or steadied with two hands. Position the hand to press the Trigger on the torch handle. With the hand torch, the hand may be positioned close to the torch head for maximum control or near the back end for maximum heat protection. Choose the holding technique that feels most comfortable and allows good control and movement.

NOTE!
The tip should never come in contact with the workpiece except during drag cutting operations.

2. Depending on the cutting operation, do one of the following:
   a. For edge starts, hold the torch perpendicular to the workpiece with the front of the tip on the edge of the workpiece at the point where the cut is to start.
   b. For standoff cutting, hold the torch 1/8 - 3/8 in (3-9 mm) from the workpiece as shown below.

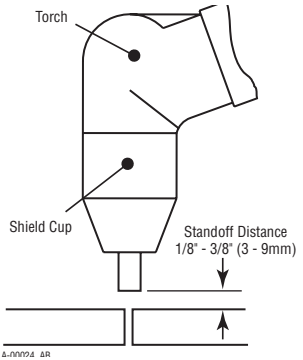

Standoff Distance

3. Hold the torch away from your body.

4. Slide the trigger release toward the back of the torch handle while simultaneously squeezing the trigger. The pilot arc will start.

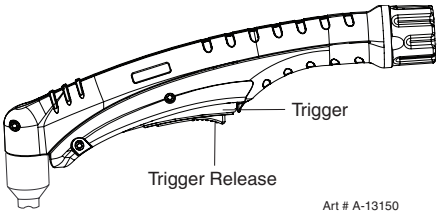

5. Bring the torch within transfer distance to the work. The main arc will transfer to the work, and the pilot arc will shut OFF.

NOTE!
The gas preflow and postflow are a characteristic of the power supply and not a function of the torch.

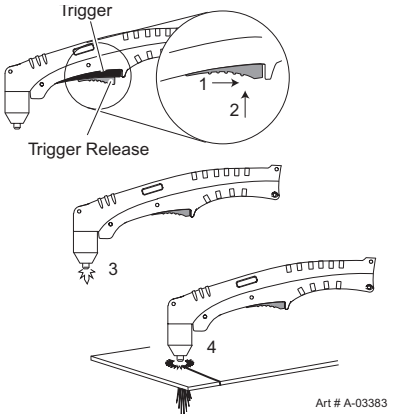

6. Cut as usual. Simply release the trigger assembly to stop cutting.

7. Follow normal recommended cutting practices as provided in the power supply operator's manual.

NOTE!
When the shield cup is properly installed, there is a slight gap between the shield cup and the torch handle. Gas vents through this gap as part of normal operation. Do not attempt to force the shield cup to close this gap. Forcing the shield cup against the torch head or torch handle can damage components.

8. For a consistent standoff height from the workpiece, install the standoff guide by sliding it onto the torch shield cup. Install the guide with the legs at the sides of the shield cup body to maintain good visibility of the cutting arc. During operation, position the legs of the standoff guide against the workpiece.

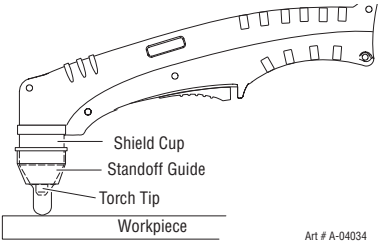

Shield Cup With Straight Edge

The drag shield cup can be used with a non conductive straight edge to make straight cuts by hand.

WARNING
The straight edge **must be** non - conductive.

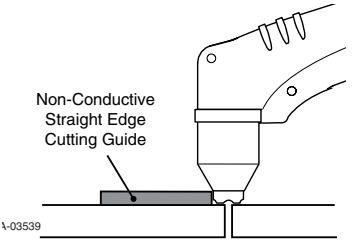

Using Drag Shield Cup With Straight Edge

The crown shield cup functions best when cutting 3/16 inch (4.7 mm) solid metal with relatively smooth surface.

Drag Cutting With a Hand Torch

Drag cutting works best on metal 1/4" (6 mm) thick or less.

NOTE!
For best parts performance and life, always use the correct parts for the type of operation.

1. Install the drag cutting tip and set the output current.
2. The torch can be comfortably held in one hand or steadied with two hands. Position the hand to press the Trigger on the torch handle. With the hand torch, the hand may be positioned close to the torch head for maximum control or near the back end for maximum heat protection. Choose the holding technique that feels most comfortable and allows good control and movement.
4. Keep the torch in contact with the workpiece during the cutting cycle.
5. Hold the torch away from your body.
6. Slide the trigger release toward the back of the torch handle while simultaneously squeezing the trigger. The pilot arc will start.

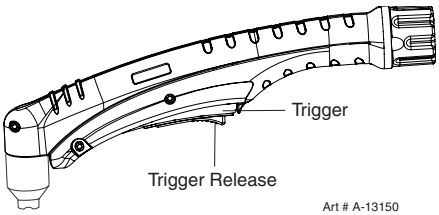

7. Bring the torch within transfer distance to the work. The main arc will transfer to the work, and the pilot arc will shut OFF.

NOTE!
The gas preflow and postflow are a characteristic of the power supply and not a function of the torch.

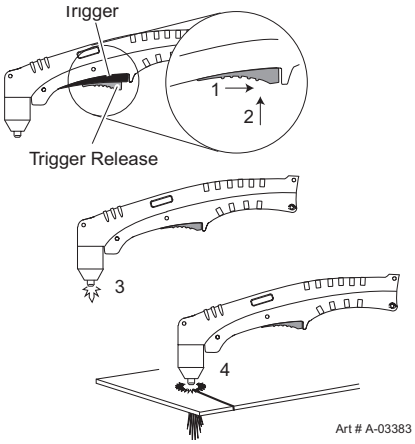

8. Cut as usual. Simply release the trigger assembly to stop cutting.
9. Follow normal recommended cutting practices as provided in the power supply operator's manual.

NOTE!
When the shield cup is properly installed, there is a slight gap between the shield cup and the torch handle. Gas vents through this gap as part of normal operation. Do not attempt to force the shield cup to close this gap. Forcing the shield cup against the torch head or torch handle can damage components.

Piercing With Hand Torch

1. Hold the torch away from your body.
2. The torch can be comfortably held in one hand or steadied with two hands. Position the hand to press the Trigger on the torch handle. With the hand torch, the hand may be positioned close to the torch head for maximum control or near the back end for maximum heat protection. Choose the technique that feels most comfortable and allows good control and movement.

NOTE!
The tip should never come in contact with the workpiece except during drag cutting operations.

3. Angle the torch slightly to direct blow-back particles away from the torch tip (and operator) rather than directly back into it until the pierce is complete.

4. In a portion of the unwanted metal start the pierce off the cutting line and then continue the cut onto the line. Hold the torch perpendicular to the workpiece after the pierce is complete.

5. Slide the trigger release toward the back of the torch handle while simultaneously squeezing the trigger. The pilot arc will start.

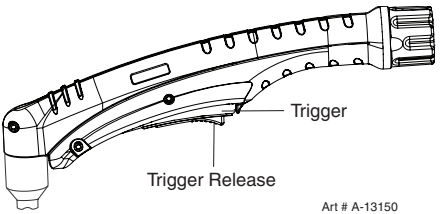

6. Bring the torch within transfer distance to the work. The main arc will transfer to the work, and the pilot arc will shut OFF.

NOTE!
The gas preflow and postflow are a characteristic of the power supply and not a function of the torch.
When the shield cup is properly installed, there is a slight gap between the shield cup and the torch handle. Gas vents through this gap as part of normal operation. Do not attempt to force the shield cup to close this gap. Forcing the shield cup against the torch head or torch handle can damage components.

7. Clean spatter and scale from the shield cup and the tip as soon as possible. Spraying the shield cup in anti - spatter compound will minimize the amount of scale which adheres to it.

Cutting speed depends on material, thickness, and the operator's ability to accurately follow the desired cut line. The following factors may have an impact on system performance:

- Torch parts wear
- Air quality
- Line voltage fluctuations
- Torch standoff height
- Proper work cable connection

4T.03 Gouging

WARNING
Be sure the operator is equipped with proper gloves, clothing, eye and ear protection and that all safety precautions at the front of this manual have been followed. Make sure no part of the operator's body comes in contact with the workpiece when the torch is activated.
Disconnect primary power to the system before disassembling the torch, leads, or power supply.

CAUTION
Sparks from plasma gouging can cause damage to coated, painted or other surfaces such as glass, plastic, and metal.
Check torch parts. The torch parts must correspond with the type of operation. Refer to Section 4T.07, Torch Parts Selection.

Gouging Parameters

Gouging performance depends on parameters such as torch travel speed, current level, lead angle (the angle between the torch and workpiece), and the distance between the torch tip and workpiece (standoff).

CAUTION
Touching the torch tip or shield cup to the work surface will cause excessive parts wear.

Torch Travel Speed

NOTE!
Refer to Appendix Pages for additional information as related to the Power Supply used.

Optimum torch travel speed is dependent on current setting, lead angle, and mode of operation (hand or machine torch).

Current Setting

Current settings depend on torch travel speed, mode of operation (hand or machine torch), and the amount of material to be removed.

Lead Angle

The angle between the torch and workpiece depends on the output current setting and torch travel speed. The recommended lead angle is 35°. At a lead angle greater than 45° the molten metal will not be blown out of the gouge and may be blown back onto the torch. If the lead angle is too small (less than 35°), less material may be removed, requiring more passes. In some applications, such as removing welds or working with light metal, this may be desirable.

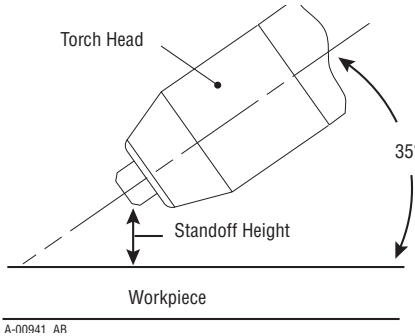

Gouging Angle and Standoff Distance

Standoff Distance

The tip to work distance affects gouge quality and depth. Standoff distance of 1/8 - 1/4 inch (3 - 6 mm) allows for smooth, consistent metal removal. Smaller standoff distances may result in a severance cut rather than a gouge. Standoff distances greater than 1/4 inch (6 mm) may result in minimal metal removal or loss of transferred main arc.

Slag Buildup

Slag generated by gouging on materials such as carbon and stainless steels, nickels, and alloyed steels, can be removed easily in most cases. Slag does not obstruct the gouging process if it accumulates to the side of the gouge path. However, slag build - up can cause inconsistencies and irregular metal removal if large amounts of material build up in front of the arc. The build - up is most often a result of improper travel speed, lead angle, or standoff height.

4T.04 Mechanized Torch Operation

Cutting With Mechanized Torch

The mechanized torch can be activated by remote control pendant or by a remote interface device such as CNC.

1. To start a cut at the plate edge, position the center of the torch along the edge of the plate.

Travel Speed

Proper travel speed is indicated by the trail of the arc which is seen below the plate. The arc can be one of the following:

1. Straight Arc

A straight arc is perpendicular to the workpiece surface. This arc is generally recommended for the best cut using air plasma on stainless or aluminum.

2. Leading Arc

The leading arc is directed in the same direction as torch travel. A five degree leading arc is generally recommended for air plasma on mild steel.

3. Trailing Arc

The trailing arc is directed in the opposite direction as torch travel.

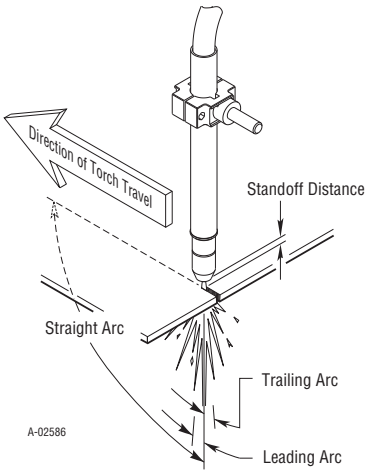

Mechanized Torch Operation

For optimum smooth surface quality, the travel speed should be adjusted so that only the leading edge of the arc column produces the cut. If the travel speed is too slow, a rough cut will be produced as the arc moves from side to side in search of metal for transfer.

Travel speed also affects the bevel angle of a cut. When cutting in a circle or around a corner, slowing down the travel speed will result in a squarer cut. The power source output should be reduced also. Refer to the appropriate Control Module Operating Manual for any Corner Slowdown adjustments that may be required.

Piercing With Machine Torch

To pierce with a machine torch, the arc should be started with the torch positioned as high as possible above the plate while allowing the arc to transfer and pierce. This standoff helps avoid having molten metal blow back onto the front end of the torch.

When operating with a cutting machine, a pierce or dwell time is required. Torch travel should not be enabled until the arc penetrates the bottom of the plate. As motion begins, torch standoff should be reduced to the recommended 1/8 - 1/4 inch (3-6 mm) distance for optimum speed and cut quality. Clean spatter and scale from the shield cup and the tip as soon as possible. Spraying or dipping the shield cup in anti - spatter compound will minimize the amount of scale which adheres to it.

4T.05 Recommended Cutting Speeds With Exposed Tip

CutMaster® 60i With Exposed Tip							Type Material: Mild Steel								
Type Plasma Gas: Air							Type Secondary Gas: Single Gas Torch								
Thickness		Tip	Output	Amperage	Speed (Per Minute)		Standoff		Plasma Gas Pressure*		Flow (SCFH)		Pierce	Pierce Height	
Inches	mm	(Cat. No.)	Volts (VDC)	(Amps)	Inches	Meters	Inches	mm	psi	bar	Plasma	Total**	Delay (Sec)	Inches	mm
0.036	0.9	9-8208	104	40	340	8.64	0.19	4.8	Set to the central region on the pressure dial. This is illuminated green when selected.		55	170	0.00	0.2	5.1
0.06	1.5	9-8208	108	40	250	6.35	0.19	4.8			55	170	0.10	0.2	5.1
0.075	1.9	9-8208	108	40	190	4.83	0.19	4.8			55	170	0.30	0.2	5.1
0.135	3.4	9-8208	110	40	105	2.67	0.19	4.8			55	170	0.40	0.2	5.1
0.188	4.8	9-8208	113	40	60	1.52	0.19	4.8			55	170	0.60	0.2	5.1
0.25	6.4	9-8208	111	40	40	1.02	0.19	4.8			55	170	1.00	0.2	5.1
0.375	9.5	9-8208	124	40	21	0.53	0.19	4.8			55	170	NR	NR	NR
0.500	12.7	9-8208	123	40	11	0.28	0.19	4.8			55	170	NR	NR	NR
0.625	15.9	9-8208	137	40	7	0.18	0.19	4.8			55	170	NR	NR	NR

CutMaster® 60i With Exposed Tip							Type Material: Stainless Steel								
Type Plasma Gas: Air							Type Secondary Gas: Single Gas Torch								
Thickness		Tip	Output	Amperage	Speed (Per Minute)		Standoff		Plasma Gas Pressure*		Flow (SCFH)		Pierce	Pierce Height	
Inches	mm	(Cat. No.)	Volts (VDC)	(Amps)	Inches	Meters	Inches	mm	psi	bar	Plasma	Total**	Delay (Sec)	Inches	mm
0.036	0.9	9-8208	103	40	355	9.02	0.125	3.2	Set to the central region on the pressure dial. This is illuminated green when selected.		55	170	0.00	0.2	5.1
0.05	1.3	9-8208	98	40	310	7.87	0.125	3.2			55	170	0.00	0.2	5.1
0.06	1.5	9-8208	98	40	240	6.10	0.125	3.2			55	170	0.10	0.2	5.1
0.078	2.0	9-8208	100	40	125	3.18	0.125	3.2			55	170	0.30	0.2	5.1
0.135	3.4	9-8208	120	40	30	0.76	0.187	4.8			55	170	0.40	0.2	5.1
0.188	4.8	9-8208	124	40	20	0.51	0.187	4.8			55	170	0.60	0.2	5.1
0.25	6.4	9-8208	122	40	15	0.38	0.187	4.8			55	170	1.00	0.2	5.1
0.375	9.5	9-8208	126	40	10	0.25	0.187	4.8			55	170	NR	NR	NR

CutMaster® 60i With Exposed Tip							Type Material: Aluminum								
Type Plasma Gas: Air							Type Secondary Gas: Single Gas Torch								
Thickness		Tip	Output	Amperage	Speed (Per Minute)		Standoff		Plasma Gas Pressure*		Flow (SCFH)		Pierce	Pierce Height	
Inches	mm	(Cat. No.)	Volts (VDC)	(Amps)	Inches	Meters	Inches	mm	psi	bar	Plasma	Total**	Delay (Sec)	Inches	mm
0.032	0.8	9-8208	110	40	440	11.18	0.187	4.8	Set to the central region on the pressure dial. This is illuminated green when selected.		55	170	0.00	0.2	5.1
0.051	1.3	9-8208	109	40	350	8.89	0.187	4.8			55	170	0.10	0.2	5.1
0.064	1.6	9-8208	112	40	250	6.35	0.187	4.8			55	170	0.10	0.2	5.1
0.079	2.0	9-8208	112	40	200	5.08	0.19	4.8			55	170	0.30	0.2	5.1
0.125	3.2	9-8208	118	40	100	2.54	0.19	4.8			55	170	0.40	0.2	5.1
0.188	4.8	9-8208	120	40	98	2.49	0.187	4.8			55	170	0.60	0.2	5.1
0.250	6.4	9-8208	123	40	50	1.27	0.187	4.8			55	170	1.00	0.2	5.1
0.375	9.5	9-8208	134	40	16	0.41	0.187	4.8			55	170	NR	NR	NR

CutMaster® 60i With Exposed Tip							Type Material: Mild Steel								
Type Plasma Gas: Air							Type Secondary Gas: Single Gas Torch								
Thickness		Tip	Output	Amperage	Speed (Per Minute)		Standoff		Plasma Gas Pressure*		Flow (SCFH)		Pierce	Pierce Height	
Inches	mm	(Cat. No.)	Volts (VDC)	(Amps)	Inches	Meters	Inches	mm	psi	bar	Plasma	Total**	Delay (Sec)	Inches	mm
0.060	1.5	9-8210	110	60	290	7.37	0.19	4.8	Set to the central region on the pressure dial. This is illuminated green when selected.		90	245	0.00	0.19	4.8
0.075	1.9	9-8210	120	60	285	7.24	0.19	4.8			90	245	0.10	0.19	4.8
0.120	3.0	9-8210	120	60	180	4.57	0.19	4.8			90	245	0.10	0.19	4.8
0.135	3.4	9-8210	119	60	170	4.32	0.19	4.8			90	245	0.10	0.19	4.8
0.188	4.8	9-8210	121	60	100	2.54	0.19	4.8			90	245	0.20	0.19	4.8
0.250	6.4	9-8210	119	60	80	2.03	0.19	4.8			90	245	0.30	0.19	4.8
0.375	9.5	9-8210	124	60	50	1.27	0.19	4.8			90	245	0.50	0.19	4.8
0.500	12.7	9-8210	126	60	26	0.66	0.19	4.8			90	245	0.75	0.19	4.8
0.625	15.9	9-8210	127	60	19	0.48	0.19	4.8			90	245	Rolling Pierce		
0.750	19.1	9-8210	134	60	14	0.36	0.19	4.8			90	245	Rolling Pierce		
1.000	25.4	9-8210	140	60	6	0.15	0.19	4.8			90	245	Rolling Pierce		
1.250	31.8	9-8210	NR, manual cutting only								90	245	NR		
1.500	38.1	9-8210	NR, manual cutting only								90	245	NR		

Rolling Pierce

A Rolling Peirce begins cutting with the torch head placed at an angleto the work surface. Splatter/ dross are blown away from the work area as the torch cuts. The torch head rotates towards vertical as the cut grows deeper and pierces the workpiece.

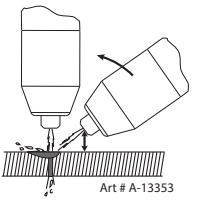

CutMaster® 60i With Exposed Tip							Type Material: Stainless Steel								
Type Plasma Gas: Air							Type Secondary Gas: Single Gas Torch								
Thickness		Tip	Output	Amperage	Speed (Per Minute)		Standoff		Plasma Gas Pressure*		Flow (SCFH)		Pierce	Pierce Height	
Inches	mm	(Cat. No.)	Volts (VDC)	(Amps)	Inches	Meters	Inches	mm	psi	bar	Plasma	Total**	Delay (Sec)	Inches	mm
0.06	1.5	9-8210	119	60	350	8.91	0.19	4.8	Set to the central region on the pressure dial. This is illuminated green when selected.		90	245	0.00	0.20	5.1
0.075	1.9	9-8210	116	60	300	7.64	0.19	4.8			90	245	0.10	0.20	5.1
0.120	3.0	9-8210	123	60	150	3.82	0.19	4.8			90	245	0.10	0.20	5.1
0.135	3.4	9-8210	118	60	125	3.18	0.19	4.8			90	245	0.10	0.20	5.1
0.188	4.8	9-8210	122	60	90	2.29	0.19	4.8			90	245	0.20	0.20	5.1
0.250	6.4	9-8210	120	60	65	1.65	0.19	4.8			90	245	0.30	0.20	5.1
0.375	9.5	9-8210	130	60	30	0.76	0.19	4.8			90	245	0.50	0.20	5.1
0.500	12.7	9-8210	132	60	21	0.53	0.19	4.8			90	245	0.75	0.20	5.1
0.625	15.9	9-8210	130	60	15	0.38	0.19	4.8			90	245	Rolling Pierce		
0.750	19.1	9-8210	142	60	12	0.31	0.25	6.4			90	245	Rolling Pierce		
1.000	25.4	9-8210	NR, manual cutting only								90	245	Rolling Pierce		
1.250	31.8	9-8210	NR, manual cutting only								90	245	NR		

CutMaster® 60i With Exposed Tip							Type Material: Aluminum								
Type Plasma Gas: Air							Type Secondary Gas: Single Gas Torch								
Thickness		Tip	Output	Amperage	Speed (Per Minute)		Standoff		Plasma Gas Pressure*		Flow (SCFH)		Pierce	Pierce Height	
Inches	mm	(Cat. No.)	Volts (VDC)	(Amps)	Inches	Meters	Inches	mm	psi	bar	Plasma	Total**	Delay (Sec)	Inches	mm
0.060	1.5	9-8210	110	60	440	11.18	0.25	6.4	Set to the central region on the pressure dial. This is illuminated green when selected.		90	245	0.00	0.25	6.4
0.075	1.9	9-8210	110	60	440	11.18	0.25	6.4			90	245	0.10	0.25	6.4
0.120	3.0	9-8210	116	60	250	6.35	0.25	6.4			90	245	0.10	0.25	6.4
0.188	3.4	9-8210	116	60	170	4.32	0.25	6.4			90	245	0.20	0.25	6.4
0.250	6.4	9-8210	132	60	85	2.16	0.25	6.4			90	245	0.30	0.25	6.4
0.375	9.5	9-8210	140	60	45	1.14	0.25	6.4			90	245	0.50	0.25	6.4
0.500	12.7	9-8210	143	60	30	0.76	0.25	6.4			90	245	0.80	0.25	6.4
0.625	15.9	9-8210	145	60	20	0.51	0.25	6.4			90	245	Rolling Pierce		
0.750	19.1	9-8210	145	60	18	0.46	0.25	6.4			90	245	Rolling Pierce		
1.000	25.4	9-8210	NR, manual cutting only								90	245	Rolling Pierce		
1.250	31.8	9-8210	NR, manual cutting only								90	245	NR		

NOTE!

* If the proper torch and lead length are selected using the 'gas pressure selector' knob and the central region (green) on the pressure dial is selected, the pressure is optimized for the selected cutting amperage. Refer to Section 4 of the Operating Manual, "Set Operating Pressure".

** Total flow rate includes plasma and secondary gas flow.

4T.06 Recommended Cutting Speeds With Shielded Tip

CutMaster® 60i With Shielded Tip							Type Material: Mild Steel								
Type Plasma Gas: Air							Type Secondary Gas: Single Gas Torch								
Thickness		Tip	Output	Amperage	Speed (Per Minute)		Standoff		Plasma Gas Pressure*		Flow (SCFH)		Pierce	Pierce Height	
Inches	mm	(Cat. No.)	Volts (VDC)	(Amps)	Inches	Meters	Inches	mm	psi	bar	Plasma	Total**	Delay (Sec)	Inches	mm
0.036	0.9	9-8208	114	40	170	4.32	0.19	4.8	Set to the central region on the pressure dial. This is illuminated green when selected.		55	170	0.00	0.2	5.1
0.06	1.5	9-8208	120	40	90	2.29	0.19	4.8			55	170	0.10	0.2	5.1
0.075	1.9	9-8208	121	40	80	2.03	0.19	4.8			55	170	0.30	0.2	5.1
0.135	3.4	9-8208	122	40	75	1.91	0.19	4.8			55	170	0.40	0.2	5.1
0.188	4.8	9-8208	123	40	30	0.76	0.19	4.8			55	170	0.60	0.2	5.1
0.25	6.4	9-8208	125	40	25	0.64	0.19	4.8			55	170	1.00	0.2	5.1
0.375	9.5	9-8208	138	40	11	0.28	0.19	4.8			55	170	NR	NR	NR
0.500	12.7	9-8208	142	40	7	0.18	0.19	4.8			55	170	NR	NR	NR
0.625	15.9	9-8208	152	40	3	0.08	0.19	4.8			55	170	NR	NR	NR

CutMaster® 60i With Shielded Tip							Type Material: Stainless Steel								
Type Plasma Gas: Air							Type Secondary Gas: Single Gas Torch								
Thickness		Tip	Output	Amperage	Speed (Per Minute)		Standoff		Plasma Gas Pressure*		Flow (SCFH)		Pierce	Pierce Height	
Inches	mm	(Cat. No.)	Volts (VDC)	(Amps)	Inches	Meters	Inches	mm	psi	bar	Plasma	Total**	Delay (Sec)	Inches	mm
0.036	0.9	9-8208	109	40	180	4.57	0.125	3.2	Set to the central region on the pressure dial. This is illuminated green when selected.		55	170	0.00	0.2	5.1
0.05	1.3	9-8208	105	40	165	4.19	0.125	3.2			55	170	0.00	0.2	5.1
0.06	1.5	9-8208	115	40	120	3.05	0.125	3.2			55	170	0.10	0.2	5.1
0.078	2.0	9-8208	120	40	65	1.65	0.187	4.8			55	170	0.30	0.2	5.1
0.135	3.4	9-8208	125	40	25	0.64	0.187	4.8			55	170	0.40	0.2	5.1
0.188	4.8	9-8208	132	40	20	0.51	0.187	4.8			55	170	0.60	0.2	5.1
0.25	6.4	9-8208	130	40	15	0.38	0.187	4.8			55	170	1.00	0.2	5.1
0.375	9.5	9-8208	130	40	10	0.25	0.187	4.8			55	170	NR	NR	NR

CutMaster® 60i With Shielded Tip							Type Material: Aluminum								
Type Plasma Gas: Air							Type Secondary Gas: Single Gas Torch								
Thickness		Tip	Output	Amperage	Speed (Per Minute)		Standoff		Plasma Gas Pressure*		Flow (SCFH)		Pierce	Pierce Height	
Inches	mm	(Cat. No.)	Volts (VDC)	(Amps)	Inches	Meters	Inches	mm	psi	bar	Plasma	Total**	Delay (Sec)	Inches	mm
0.032	0.8	9-8208	116	40	220	5.59	0.187	4.8	Set to the central region on the pressure dial. This is illuminated green when selected.		55	170	0.00	0.2	5.1
0.051	1.3	9-8208	116	40	210	5.33	0.187	4.8			55	170	0.00	0.2	5.1
0.064	1.6	9-8208	118	40	180	4.57	0.187	4.8			55	170	0.10	0.2	5.1
0.079	2.0	9-8208	116	40	150	3.81	0.19	4.8			55	170	0.30	0.2	5.1
0.125	3.2	9-8208	130	40	75	1.91	0.19	4.8			55	170	0.40	0.2	5.1
0.188	4.8	9-8208	132	40	60	1.52	0.187	4.8			55	170	0.60	0.2	5.1
0.250	6.4	9-8208	134	40	28	0.71	0.187	4.8			55	170	1.00	0.2	5.1
0.375	9.5	9-8208	143	40	11	0.28	0.187	4.8			55	170	NR	NR	NR

CutMaster® 60i With Shielded Tip							Type Material: Mild Steel								
Type Plasma Gas: Air							Type Secondary Gas: Single Gas Torch								
Thickness		Tip	Output	Amperage	Speed (Per Minute)		Standoff		Plasma Gas Pressure*		Flow (SCFH)		Pierce	Pierce Height	
Inches	mm	(Cat. No.)	Volts (VDC)	(Amps)	Inches	Meters	Inches	mm	psi	bar	Plasma	Total**	Delay (Sec)	Inches	mm
0.060	1.5	9-8210	124	60	250	6.35	0.19	4.8	Set to the central region on the pressure dial. This is illuminated green when selected.		90	245	0.00	0.2	5.1
0.075	1.9	9-8210	126	60	237	6.02	0.19	4.8			90	245	0.10	0.2	5.1
0.120	3.0	9-8210	126	60	230	5.84	0.19	4.8			90	245	0.10	0.2	5.1
0.135	3.4	9-8210	128	60	142	3.61	0.19	4.8			90	245	0.10	0.2	5.1
0.188	4.8	9-8210	128	60	125	3.18	0.19	4.8			90	245	0.20	0.2	5.1
0.250	6.4	9-8210	123	60	80	2.03	0.19	4.8			90	245	0.30	0.2	5.1
0.375	9.5	9-8210	132	60	34	0.86	0.19	4.8			90	245	0.50	0.2	5.1
0.500	12.7	9-8210	137	60	23	0.58	0.19	4.8			90	245	0.75	0.2	5.1
0.625	15.9	9-8210	139	60	14	0.36	0.19	4.8			90	245	NR	NR	NR
0.750	19.1	9-8210	145	60	14	0.36	0.19	4.8			90	245	NR	NR	NR
1.000	25.4	9-8210	156	60	4	0.10	0.19	4.8			90	245	NR	NR	NR

CutMaster® 60i With Shielded Tip							Type Material: Stainless Steel								
Type Plasma Gas: Air							Type Secondary Gas: Single Gas Torch								
Thickness		Tip	Output	Amperage	Speed (Per Minute)		Standoff		Plasma Gas Pressure*		Flow (SCFH)		Pierce	Pierce Height	
Inches	mm	(Cat. No.)	Volts (VDC)	(Amps)	Inches	Meters	Inches	mm	psi	bar	Plasma	Total**	Delay (Sec)	Inches	mm
0.06	1.5	9-8210	110	60	165	4.19	0.13	3.2	Set to the central region on the pressure dial. This is illuminated green when selected.		90	245	0.00	0.20	5.1
0.075	1.9	9-8210	116	60	155	3.94	0.13	3.2			90	245	0.10	0.20	5.1
0.120	3.0	9-8210	115	60	125	3.18	0.13	3.2			90	245	0.10	0.20	5.1
0.135	3.4	9-8210	118	60	80	2.03	0.13	3.2			90	245	0.10	0.20	5.1
0.188	4.8	9-8210	120	60	75	1.91	0.13	3.2			90	245	0.20	0.20	5.1
0.250	6.4	9-8210	121	60	60	1.52	0.13	3.2			90	245	0.30	0.20	5.1
0.375	9.5	9-8210	129	60	28	0.71	0.13	3.2			90	245	0.50	0.20	5.1
0.500	12.7	9-8210	135	60	17	0.43	0.19	4.8			90	245	0.75	0.20	5.1
0.625	15.9	9-8210	135	60	14	0.36	0.19	4.8			90	245	NR	NR	NR
0.750	19.1	9-8210	142	60	10	0.25	0.19	4.8			90	245	NR	NR	NR

CutMaster® 60i With Shielded Tip							Type Material: Aluminum								
Type Plasma Gas: Air							Type Secondary Gas: Single Gas Torch								
Thickness		Tip	Output	Amperage	Speed (Per Minute)		Standoff		Plasma Gas Pressure*		Flow (SCFH)		Pierce	Pierce Height	
Inches	mm	(Cat. No.)	Volts (VDC)	(Amps)	Inches	Meters	Inches	mm	psi	bar	Plasma	Total**	Delay (Sec)	Inches	mm
0.060	1.5	9-8210	105	60	350	8.89	0.13	3.2	Set to the central region on the pressure dial. This is illuminated green when selected.		90	245	0.00	0.20	5.1
0.075	1.9	9-8210	110	60	350	8.89	0.13	3.2			90	245	0.10	0.20	5.1
0.120	3.0	9-8210	110	60	275	6.99	0.13	3.2			90	245	0.10	0.20	5.1
0.188	3.4	9-8210	122	60	140	3.56	0.13	3.2			90	245	0.20	0.20	5.1
0.250	6.4	9-8210	134	60	80	2.03	0.19	4.8			90	245	0.30	0.20	5.1
0.375	9.5	9-8210	140	60	45	1.14	0.19	4.8			90	245	0.50	0.20	5.1
0.500	12.7	9-8210	144	60	26	0.66	0.19	4.8			90	245	0.80	0.20	5.1
0.625	15.9	9-8210	145	60	19	0.48	0.19	4.8			90	245	NR	NR	NR
0.750	19.1	9-8210	150	60	15	0.38	0.19	4.8			90	245	NR	NR	NR

NOTE!

* Gas pressure shown is for torches with leads up to 25' / 7.6 m long. For 50' / 15.2 m leads, refer to Section 4 of the Operating Manual, "Set Operating Pressure".

** Total flow rate includes plasma and secondary gas flow.

PATENT INFORMATION

Plasma Cutting Torch Patents

The following parts are covered under U.S. and Foreign Patents as follows:

Catalog #	Description	Patent(s)
9-8215	Electrode	US Pat No(s) 6163008; 6987238 Other Pat(s) Pending
9-8213	Cartridge	US Pat No(s) 6903301; 6717096; 6936786; 6703581; D496842; D511280; D492709; D499620; D504142 Other Pat(s) Pending
9-8205	Tip	US Pat No(s) 6774336; 7145099; 6933461 Other Pat(s) Pending
9-8206	Tip	US Pat No(s) 6774336; 7145099; 6933461 Other Pat(s) Pending
9-8207	Tip	US Pat No(s) 6774336; 7145099; 6933461 Other Pat(s) Pending
9-8252	Tip	US Pat No(s) 6774336; 7145099; 6933461 Other Pat(s) Pending
9-8208	Tip	US Pat No(s) 6774336; 7145099; 6933461 Other Pat(s) Pending
9-8209	Tip	US Pat No(s) 6774336; 7145099; 6933461 Other Pat(s) Pending
9-8210	Tip	US Pat No(s) 6774336; 7145099; 6933461 Other Pat(s) Pending
9-8231	Tip	US Pat No(s) 6774336; 7145099; 6933461 Other Pat(s) Pending
9-8211	Tip	US Pat No(s) 6774336; 7145099; 6933461 Other Pat(s) Pending
9-8212	Tip	US Pat No(s) 6774336; 7145099; 6933461 Other Pat(s) Pending
9-8253	Tip	US Pat No(s) 6774336; 7145099; 6933461 Other Pat(s) Pending
9-8225	Tip	US Pat No(s) 6774336; 7145099; 6933461 Other Pat(s) Pending
9-8226	Tip	US Pat No(s) 6774336; 7145099; 6933461 Other Pat(s) Pending
9-8227	Tip	US Pat No(s) 6774336; 7145099; 6933461 Other Pat(s) Pending
9-8228	Tip	US Pat No(s) 6774336; 7145099; 6933461 Other Pat(s) Pending
9-8241	Shield Cap	US Pat No(s) 6914211; D505309 Other Pat(s) Pending
9-8243	Shield Cap	US Pat No(s) 6914211; D493183 Other Pat(s) Pending
9-8235	Shield Cap	US Pat No(s) 6914211; D505309 Other Pat(s) Pending
9-8236	Shield Cap	US Pat No(s) 6914211; D505309 Other Pat(s) Pending
9-8237	Shield Cup	US Pat No(s) 6914211; D501632; D511633 Other Pat(s) Pending
9-8238	Shield Cap	US Pat No(s) 6914211; D496951 Other Pat(s) Pending
9-8239	Shield Cap	US Pat No(s) 6914211; D496951 Other Pat(s) Pending
9-8244	Shield Cap	US Pat No(s) 6914211; D505309 Other Pat(s) Pending
9-8245	Shield Cap	US Pat No(s) 6914211; D496951 Other Pat(s) Pending

The following parts are also licensed under U.S. Patent No. 5,120,930 and 5,132,512:

Catalog #	Description
9-8235	Shield Cap
9-8236	Shield Cap
9-8237	Shield Cup
9-8238	Shield Cap
9-8239	Shield Cap
9-8244	Shield Cap
9-8245	Shield Cap

Patents Pending for the following:

Quick Disconnect Torch and Quick Disconnect Torch Leads

5.01 General Maintenance



Warning!
Disconnect input power before maintaining.

Maintain more often if used under severe conditions

Each Use

Visual check of torch tip and electrode

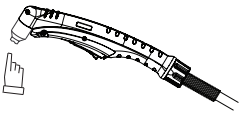

Weekly

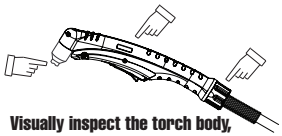

Visually inspect the torch body, consumables and Quick Connect

Visually inspect the cables and leads. Replace as needed

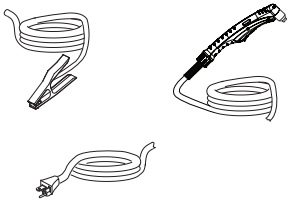

3 Months

Replace all broken parts

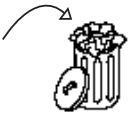

Clean exterior of power supply

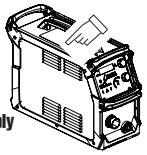

Art# A-13267

5.02 Maintenance Schedule

NOTE!
The actual frequency of maintenance may need to be adjusted according to the operating environment.

Daily Operational Checks or Every Six Cutting Hours:

1. Check torch consumable parts, replace if damaged or worn.
2. Check plasma and secondary supply and pressure/flow.
3. Purge plasma gas line to remove any moisture build-up.

Weekly or Every 30 Cutting Hours:

1. Check fan for proper operation and adequate air flow.
2. Inspect torch for any cracks or exposed wires, replace if necessary.
3. Inspect input power cable for damage or exposed wires, replace if necessary.

Six Months or Every 720 Cutting Hours:

1. Check the in-line air filter(s), clean or replace as required.
2. Check cables and hoses for leaks or cracks, replace if necessary.

CAUTION
Do not blow air into the power supply during cleaning. Blowing air into the unit can cause metal particles to interfere with sensitive electrical components and cause damage to the unit.

5.03 Common Faults

Problem - Symptom	Common Cause
Insufficient Penetration	1. Cutting speed too fast. 2. Torch tilted too much. 3. Metal too thick. 4. Worn torch parts 5. Cutting current too low. 6. Non - Genuine Thermal Dynamics parts used 7. Incorrect gas pressure
Main Arc Extinguishes	1. Cutting speed too slow. 2. Torch standoff too high from workpiece. 3. Cutting current too high. 4. Work cable disconnected. 5. Worn torch parts. 6. Non - Genuine Thermal Dynamics parts used
Excessive Dross Formation	1. Cutting speed too slow. 2. Torch standoff too high from workpiece. 3. Worn torch parts. 4. Improper cutting current. 5. Non - Genuine Thermal Dynamics parts used 6. Incorrect gas pressure
Short Torch Parts Life	1. Oil or moisture in air source. 2. Exceeding system capability (material too thick). 3. Excessive pilot arc time 4. Gas pressure too low. 5. Improperly assembled torch. 6. Non - Genuine Thermal Dynamics parts used
Difficult Starting	1. Worn torch parts. 2. Non - Genuine Thermal Dynamics parts used. 3. Incorrect gas pressure.

5.04 Fault Indicator

At initial power up, the system goes through a series of self checks before it is ready for use. If during those checks it detects something is not within proper operating parameters, a fault will occur. If that happens the Fault indicator  will light followed by the Error Code  , and number in the digital display.

 **Error Code Indicator**

Indicates when there is something that needs to be adjusted or repaired.

E001, E002, etc. Light up fault indicator also.

Error Code	Description
E001 Over Temp	Ambient temperature too high, duty cycle exceeded, fan failure or other internal fault.
E002 Input Fault	Input voltage outside the range of the unit or internal fault resulting in low bus voltage.
	1phase / 3phase jumpers J300 on Bias PCB set wrong.
E004 PIP Fault	Parts in Place fault. Shield cup not in place or tight.
E005 PIC Fault	Parts in Contact fault. Missing or worn tip/start cartridge or electrode. Inlet pressure exceeds rating causing continuous gas flow.
E009 Fan Fault	Fan failed or disconnected.
E010 Low Output Current	Work Lead current less than output current setting. Shorted pilot switch or defective current sensor possible.
E012 Output Fault	Tip to electrode voltage too low. Consumables fail to separate when gas flows, start cartridge stuck, failed power supply, no output or shorted torch body.
E014 Trigger Fault	Torch trigger (start signal) active at start up.
E016 Pressure Fault	Low Air/Gas pressure. Output pressure too low for selected parameters.

5.05 Basic Troubleshooting Guide



WARNING
There are extremely dangerous voltage and power levels present inside this unit. Do not attempt to diagnose or repair unless you have had training in power electronics measurement and troubleshooting techniques.

Problem - Symptom	Possible Cause	Recommended Action
ON / OFF Switch is ON but the A/C Indicator does not light	1. Primary power disconnect is in OFF position. 2. Primary fuses / breakers are blown or tripped. 3. Faulty components in unit.	1. Turn primary power disconnect switch to ON position. 2. a) Have qualified person check primary fuses / breakers. b) Connect unit to known good primary power receptacle 3. Return to authorized service center for repair or replacement.
Fault indicator flashing, Error Code E002	1. Primary input voltage problem. 2. Faulty components in unit.	1. Have qualified person check primary voltage to insure it meets unit requirements see Section "2.05 Input Wiring Specifications" on page 19. 2. Return to authorized service center for repair or replacement.
TEMPERATURE indicator **ON**. FAULT indicator flashing. Error Code E001	1. Air flow through or around the unit is obstructed. 2. Duty cycle of the unit has been exceeded. 3. Failed components in unit.	1. Refer to clearance information – see Section "2.04 Power Supply Specifications" on page 18 2. Allow unit to cool. 3. Return to authorized service center for repair or replacement.
GAS LED OFF, FAULT and MIN pressure indicators flashing. Error Code E016	1. Gas supply not connected to unit. 2. Gas supply not turned **ON**. 3. Gas supply pressure too low. 4. Failed components in unit.	1. Connect gas supply to unit. 2. Turn gas supply **ON**. 3. Set air supply inlet pressure to unit to 120 psi. Set leads length to match the actual length being used. 4. Return to authorized service center for repair or replacement.
FAULT and indicators flashing. Error Code E004	1. Shield Cup loose. 2. Torch not properly connected to power supply. 3. Problem in torch and leads PIP circuit. 4. Failed components in unit.	1. Hand tighten the shield cup until it is snug. 2. Insure torch ATC is securely fastened to unit. 3. Replace torch and leads or return to authorized service center for repair or replacement. 4. Return to authorized service center for repair or replacement.
FAULT and indicators flashing. Error Code E014	1. Start signal is active when ON/OFF SWITCH is turned to ON position. 2. Problem in the torch and leads switch circuit. 3. Failed components in unit.	1. Start can be active for one of the following: • Hand torch switch held closed • Hand pendant switch held closed • CNC START signal is active low Release the START signal source 2. Replace torch and leads or return to authorized service center for repair or replacement. 3. Return to authorized service center for repair or replacement.
FAULT indicators flashing. Error code E005	1. Torch shield cup is loose. 2. Torch tip, electrode or starter cartridge missing. 3. Torch start cartridge is stuck. 4. Unit inlet gas pressure is too high causing continuous gas flow. 5. Open conductor in torch leads. 6. Problem in the torch and leads switch circuit. 7. Failed components in unit.	1. Tighten shield cup by hand. Do not over tighten. 2. Turn OFF power supply. Remove shield cup. Install missing parts. 3. Turn OFF power supply. Bleed down system pressure. Remove shield cup, tip and start cartridge. Check start cartridge lower end fitting for free movement. Replace if fitting does not move freely. 4. Decrease gas supply pressure to 125 PSI or less. 5. Replace torch and leads or return to authorized service center for repair or replacement. 6. Replace torch and leads or return to authorized service center for repair or replacement. 7. Return to authorized service center for repair or replacement

Problem - Symptom	Possible Cause	Recommended Action
Nothing happens when torch switch or remote switch is closed (Or CNC START signal is active) No gas flow, DC LED OFF.	1. Problem in the torch and leads switch circuit (Remote pendant switch circuit). 2. CNC Controller device not providing Start signal. 3. Failed components in unit.	1. Take Torch and Leads (Remote Pendant) to Authorized Repair Facility. 2. Contact Controller manufacturer. 3. Return to authorized service center for repair or replacement.
FAULT indicators flashing. Error code E012	1. Upper O-ring on torch head is in wrong position. 2. Torch starter cartridge is stuck. 3. Worn or faulty torch parts. 4. Shorted Torch.	1. Remove shield cup from torch; check upper O-ring position; correct if necessary. 2. Turn OFF power supply. Bleed down system pressure. Remove shield cup, tip and starter cartridge. Check starter cartridge lower end fitting for free movement. Replace if fitting does not move freely. 3. Inspect torch consumable parts. Replace if necessary. 4. Replace torch and leads or return to an authorized service center for repair.
No Fault lights ON, no arc in torch.	1. Failed components in unit.	1. Return to an authorized service center for repair.
FAULT indicators flashing Error code E024 or E031	1. Internal Error	1. Turn the ON / OFF switch OFF then back ON again. If that does not clear the fault, return to an authorized service center for repair.
Pilot arc is ON but cutting arc will not establish	1. Work cable not connected to work piece. 2. Work cable/connector broken. 3. Failed components in unit.	1. Connect work cable. 2. Replace work cable. 3. Return to an authorized service center for repair.
FAULT indicator. Work Lead Current is less than output current setting. Error code E010 Low Output Current.	1. Inverter board pilot IGBT may be shorted 2. HCT1 Current Sensor or harness is bad.	1. Return to an authorized service center for repair 2. Return to an authorized service center for repair
Torch cutting is diminished	1. Incorrect current setting. 2. Worn torch consumables. 3. Poor work cable connection to work piece. 4. Torch being moved too fast. 5. Excessive oil or water in torch. 6. Failed components in unit.	1. Check and adjust to proper setting. 2. Check torch consumables and replace as needed. 3. Check the connection of the Work Lead to the work piece. 4. Reduce cutting speed. 5. Refer to "Check air quality" in Section 3 Torch. 6. Return to an authorized service center for repair.

Sequence of Operation (Block Diagram)

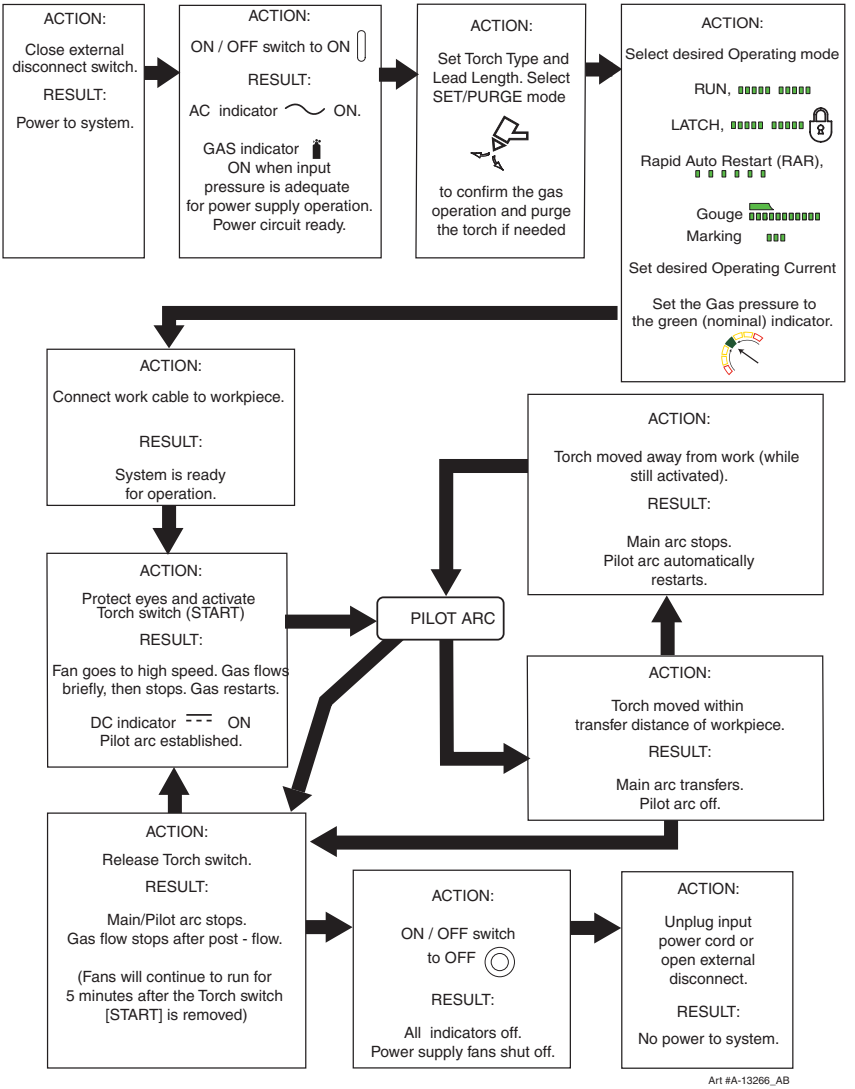

5.06 Power Supply Basic Parts Replacement

WARNING
Disconnect primary power to the system before disassembling the torch, leads, or power supply.

This section describes procedures for basic parts replacement. For more detailed parts replacement procedures, refer to the Power Supply Service Manual.

A. Filter Element Assembly Replacement

The Filter Element Assembly (9-0116) is in the rear panel. For better system performance, the filter element should be checked per the Maintenance Schedule (Section 5.02), and either cleaned or replaced.

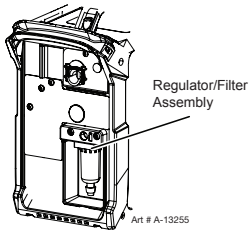

1. Remove power from the power supply; turn OFF the gas supply and bleed down the system.
2. Remove the clear filter bowl with wrench  provided with the system 9-9675.

NOTE!
Filter replacement part numbers can be found in Section 6 of this manual.

3. Remove the filter element and clean or replace.

NOTE!
If replacing or cleaning just the filter element refer to the following illustration for disassembly.

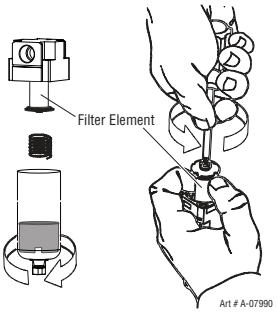

4. Install the new or cleaned assembly by reversing these procedures.
5. Turn ON the air supply and check for leaks before reinstalling the cover.

Optional Single-Stage Filter Element Replacement

These instructions apply to power supplies where the optional Single-Stage Filter has been installed.

The Power Supply shuts down automatically when the Filter Element becomes completely saturated. The Filter Element can be removed from its housing, dried, and reused. Allow 24 hours for Element to dry. Refer to Section 6, Parts List, for replacement filter element catalog number.

1. Remove power from power supply.
2. Shut OFF air supply and bleed down system before disassembling Filter to change Filter Element.
3. Disconnect gas supply hose.
4. Turn the Filter Housing Cover counter-clockwise and remove it. The Filter Element is located inside the Housing.

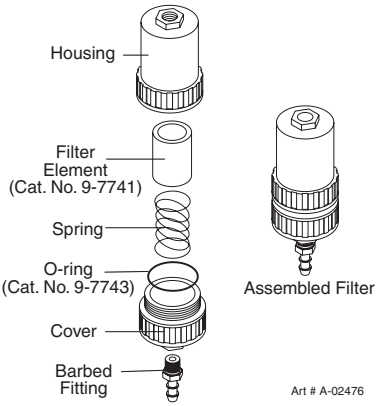

Optional Single-Stage Filter Element Replacement

5. Remove the Filter Element from the Housing and set Element aside to dry.
6. Wipe inside of housing clean, then insert the replacement Filter Element open side first.
7. Replace Housing on Cover.
8. Reattach gas supply. Check for leaks.

NOTE!
If unit leaks between housing and cover, inspect the O-ring for cuts or other damage.

Optional Two-Stage Filter Element Replacement

The Two-Stage Air Filter has two Filter Elements. When the Filter Elements become dirty the Power Supply will continue to operate but cut quality may become unacceptable. Refer to Section 6, Parts List, for replacement filter element catalog number.

1. Shut OFF primary input power.
2. Shut OFF air supply and bleed down system.

WARNING
Always turn OFF the air supply and bleed the system before disassembling the Filter Assembly as injury could result.

3. Loosen the two bolts on the top of the Filter Assembly enough to allow the Filter Elements to move freely.
4. Note the location and orientation of the old Filter Elements.
5. Slide out the old Filter Elements.

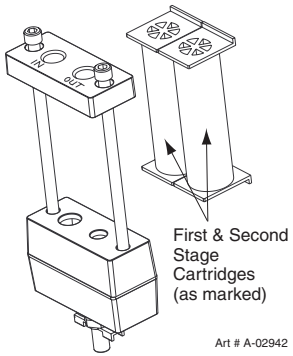

Optional Two-Stage Filter Replacement

6. Slide the replacement Filter Elements into the Filter Assembly, with the same orientation as noted in Step 4 above.
7. Hand tighten the two bolts evenly, then torque each bolt to 20 - 30 in-lbs (2.3 - 3.4 Nm). Improper torque may damage the gasket.
8. Slowly apply air pressure to the assembly, checking for leaks.

NOTE!
A small amount of air leakage from the bottom fitting is normal.

NOTE!
Filter replacement part numbers can be found in Section 6 of this manual.

This completes the parts replacement procedures.

SECTION 5 TORCH: SERVICE

5T.01 General Maintenance

NOTE!
Refer to Previous "Section 5: System" for common and fault indicator descriptions.

Cleaning Torch

Even if precautions are taken to use only clean air with a torch, eventually the inside of the torch becomes coated with residue. This buildup can affect the pilot arc initiation and the overall cut quality of the torch.

WARNING
Disconnect primary power to the system before disassembling the torch or torch leads.
DO NOT touch any internal torch parts while the AC indicator light of the Power Supply is ON.

The inside of the torch should be cleaned with electrical contact cleaner using a cotton swab or soft wet rag. In severe cases, the torch can be removed from the leads and cleaned more thoroughly by pouring electrical contact cleaner into the torch and blowing it through with compressed air.

CAUTION
Dry the torch thoroughly before reinstalling.

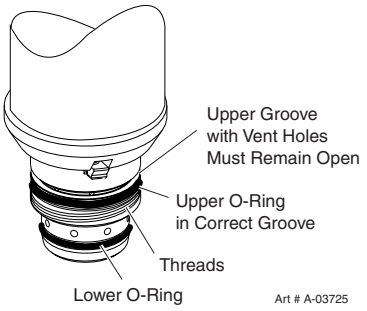

Torch Head O-Ring

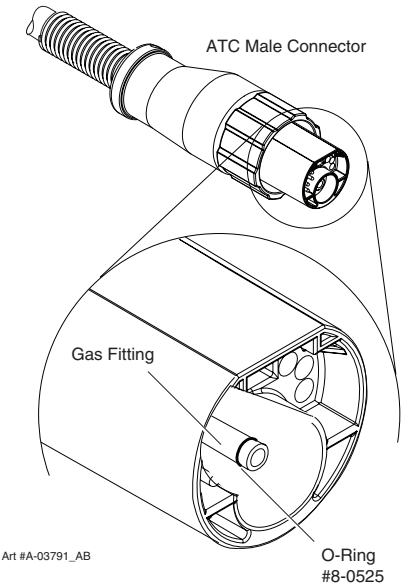

ATC O-Ring

O-Ring Lubrication

An O-Ring on the Torch Head and ATC Male Connector requires lubrication on a scheduled basis. This will allow the O-Rings to remain pliable and provide a proper seal. The O-Rings will dry out, becoming hard and cracked if the lubricant is not used on a regular basis. This can lead to potential performance problems.

It is recommended to apply a very light film of O-Ring lubricant (Catalog # 8-4025) to the O-Rings on a weekly basis.

NOTE!
DO NOT use other lubricants or grease, they may not be designed to operate within high temperatures or may contain "unknown elements" that may react with the atmosphere. This reaction can leave contaminants inside the torch. Either of these conditions can lead to inconsistent performance or poor parts life.

5T.02 Inspection and Replacement of Consumable Torch Parts

WARNING
Disconnect primary power to the system before disassembling the torch or torch leads.
DO NOT touch any internal torch parts while the AC indicator light of the Power Supply is ON.

Remove the consumable torch parts as follows:

NOTE!
The shield cup holds the tip and starter cartridge in place. Position the torch with the shield cup facing upward to prevent these parts from falling out when the cup is removed.

1. Unscrew and remove the shield cup from the torch.

NOTE!
Slag built up on the shield cup that cannot be removed may effect the performance of the system.

2. Inspect the cup for damage. Wipe it clean or replace if damaged.

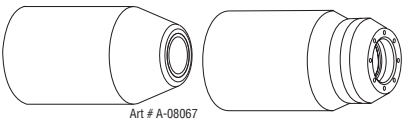

Shield Cups

3. On torches with a shield cup body and a shield cap or deflector, ensure that the cap or deflector is threaded snugly against the shield cup body. In shielded drag cutting operations (only), there may be an O-Ring between the shield cup body and drag shield cap. Do not lubricate the O-Ring.

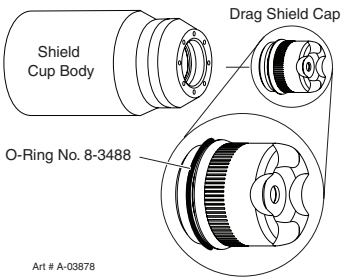

4. Remove the tip. Check for excessive wear (indicated by an elongated or oversized orifice). Clean or replace the tip if necessary.

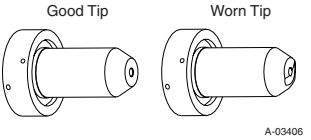

Example of Tip Wear

5. Remove the starter cartridge. Check for excessive wear, plugged gas holes, or discoloration. Check the lower end fitting for free motion. Replace if necessary.

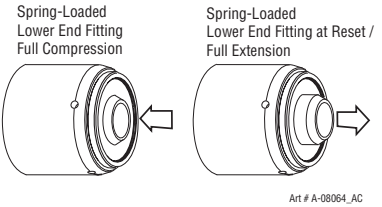

6. Pull the Electrode straight out of the Torch Head. Check the face of the electrode for excessive wear. Refer to the following figure.

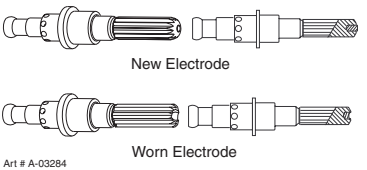

Electrode Wear

7. Reinstall the Electrode by pushing it straight into the torch head until it clicks.

8. Reinstall the desired starter cartridge and tip into the torch head.

9. Hand tighten the shield cup until it is seated on the torch head. If resistance is felt when installing the cup, check the threads before proceeding.

This completes the parts replacement procedures.

6.01 Introduction

A. Parts List Breakdown

The parts list provide a breakdown of all replaceable components. The parts lists are arranged as follows:

6.03	Power Supply Replacement
6.04	Replacement Power Supply Parts
6.05	Options and Accessories
6.06	External Replacement Parts (Plastic)
6.07	Replacement Parts for SL60QD™ Hand Torch
6.08	Torch Consumable Parts (SL60 / SL60QD™)
6.09	Torch Consumable Parts SL100

NOTE!
Parts listed without item numbers are not shown, but may be ordered by the catalog number shown.

B. Returns

If a product must be returned for service, contact your distributor. Materials returned without proper authorization will not be accepted.

6.02 Ordering Information

Order replacement parts by catalog number and complete description of the part or assembly, as listed in the parts list for each type item. Also include the model and serial number of the power supply. Address all inquiries to your authorized distributor.

6.03 Power Supply Replacement

The following items are included with the replacement power supply: work cable & clamp, input power cable, gas pressure regulator / filter, and operating manual.

Qty	Description	Catalog #
1	CutMaster 60i Power Supply 400VAC, THREE Phase, 60Hz, Non CE with input power cable and plug	0559356303
1	CutMaster 60i Power Supply 400VAC, THREE Phase, 60Hz, CE with input power cable and plug	0559356304

6.04 Replacement Power Supply Parts

Qty	Description	Catalog #
1	Filter Assembly Replacement Element (Factory filter)	9-0116
1	THREE phase Input Power Cord for 208/480 V Power Supply	9-9706

6.05 Options and Accessories

Qty	Description	Catalog #
1	Single - Stage Filter Kit (includes Filter & Hose)	7-7507
1	Replacement Filter Body	9-7740
1	Replacement Filter Hose (not shown)	9-7742
2	Replacement Filter Element	9-7741
1	Two - Stage Filter Kit (includes Hose & Mounting Screws)	9-9387
1	Two - Stage Air Filter Assembly	9-7527
1	First Stage Cartridge	9-1021
1	Second Stage Cartridge	9-1022
1	Work Cable #8 with 50mm Dinse plug	9-9692
1	Multi - Purpose Cart	7-8888
1	Filter Wrench (Factory Filter)	9-9675

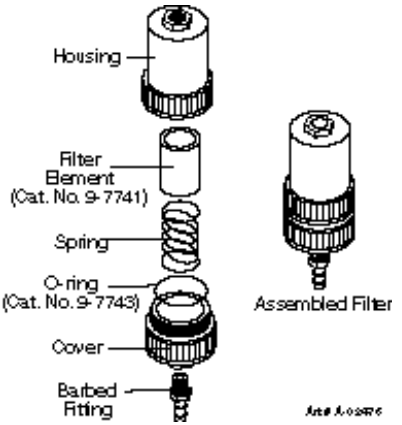

Optional Single - Stage Filter Kit

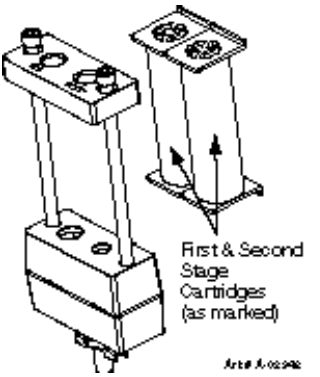

Optional Two - Stage Filter Kit

6.06 External Replacement Parts (Plastic)

Item #	Qty	Description	Catalog #
1	1	Handle, Case Top	9-9702
2	1	Bezel, Side Frame RH	9-9703
3	1	Handle, CM60i (3 total)	9-9665
4	1	Foot, Case Front	9-9694
5	1	Bezel, Side Frame LH	9-9704
6	1	Foot, Case Rear	9-9693

Screws and nuts can be obtained at a local hardware store.

a	M5x0.8x12mm screw
b	M5x0.8x16mm screw
c	M5x0.8 nut

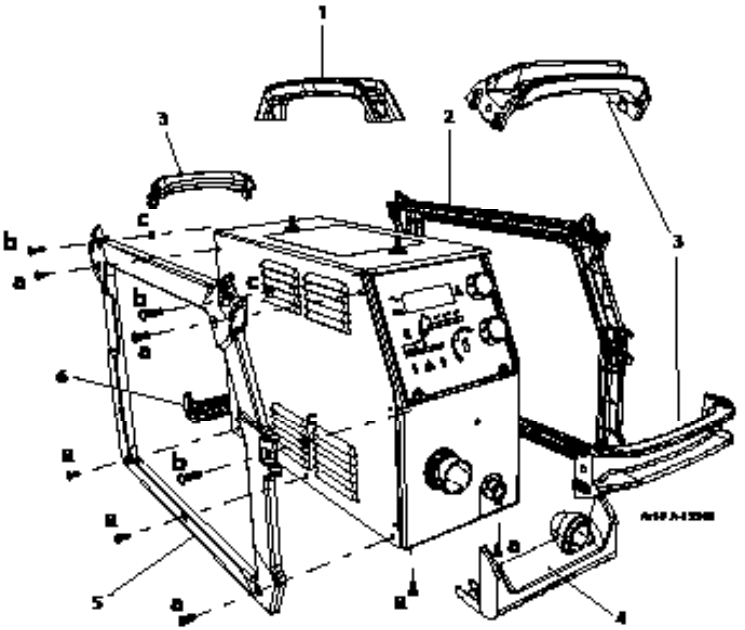

6.07 Replacement Parts for Hand Torch

Item #	Qty	Description	Catalog #
1	1	SL60QD™ Torch Handle Assembly (PKG)	7-5681
2		Leads Assemblies with ATC connector and Quick Connectors	
	1	SL60QD™, 20 - foot Leads Assembly with ATC and QD connectors	4-5620
	1	SL60QD™, 50 - foot Leads Assembly with ATC and QD connectors	4-5650
1&2	1	SL60QD™ Torch and Leads Assembly, 20 - foot	7-5620
1&2	1	SL60QD™ Torch and Leads Assembly, 50 - foot	7-5650

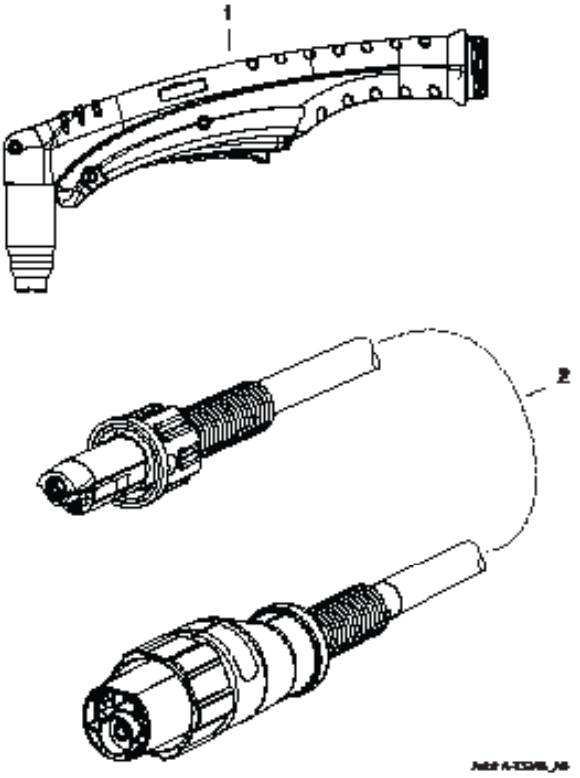

6.08 Torch Consumable Parts (SL60)

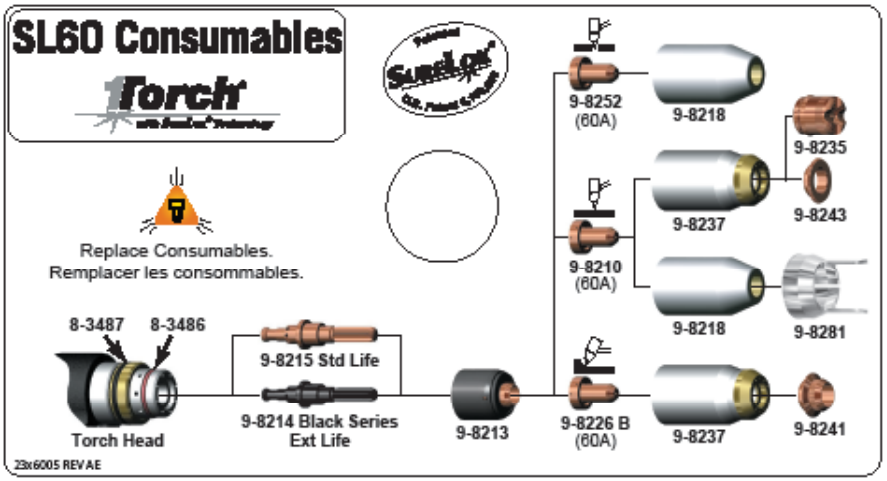

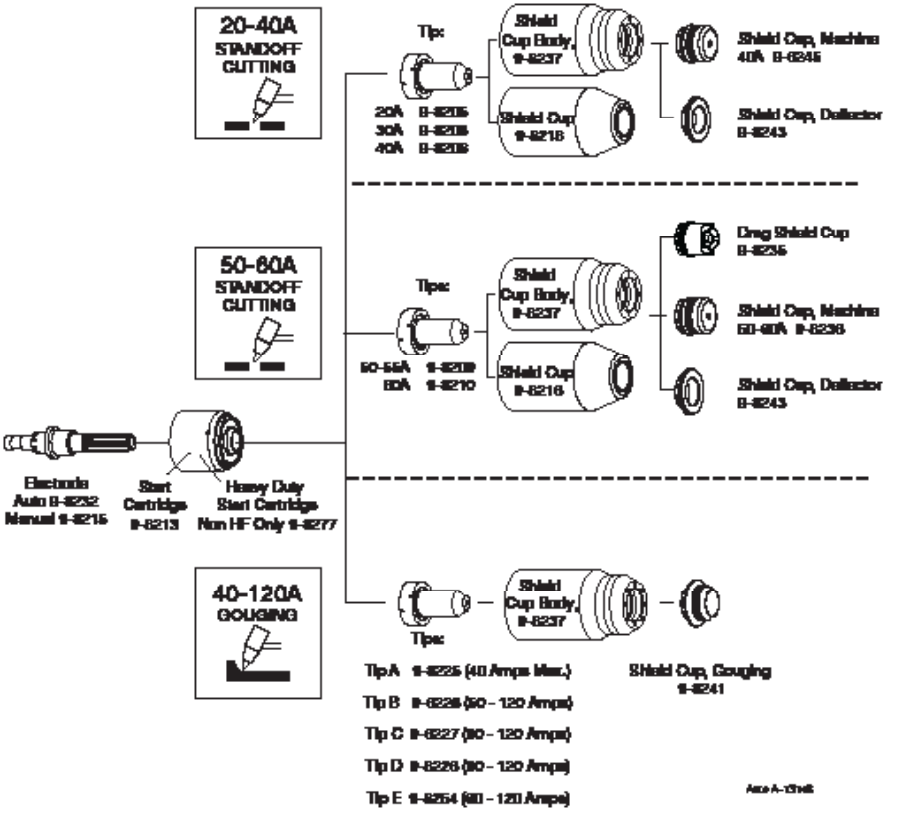
20-40A
STANDOFF
CUTTING
Tips:
20A 9-8215
30A 9-8215
40A 9-8215
Shield Cup Body, 9-8237
Shield Cup 9-8216
Shield Cup, Machine 40A 9-8245
Shield Cup, Deflector 9-8243
50-60A
STANDOFF
CUTTING
Tips:
50-55A 9-8219
60A 9-8210
Shield Cup Body, 9-8237
Shield Cup 9-8216
Drag Shield Cup 9-8235
Shield Cup, Machine 50-60A 9-8236
Shield Cup, Deflector 9-8243
Electrode
Auto 9-8232
Manual 9-8215
Start Cartridge 9-8213
Heavy Duty Start Cartridge Non HF Only 9-8277
40-120A
GOUGING
Tips:
Shield Cup Body, 9-8237
Shield Cup, Gouging 9-8241
Tip A 9-8225 (40 Amps Max.)
Tip B 9-8228 (50 - 120 Amps)
Tip C 9-8227 (80 - 120 Amps)
Tip D 9-8226 (80 - 120 Amps)
Tip E 9-8254 (80 - 120 Amps)

APPENDIX 1: DATA TAG INFORMATION

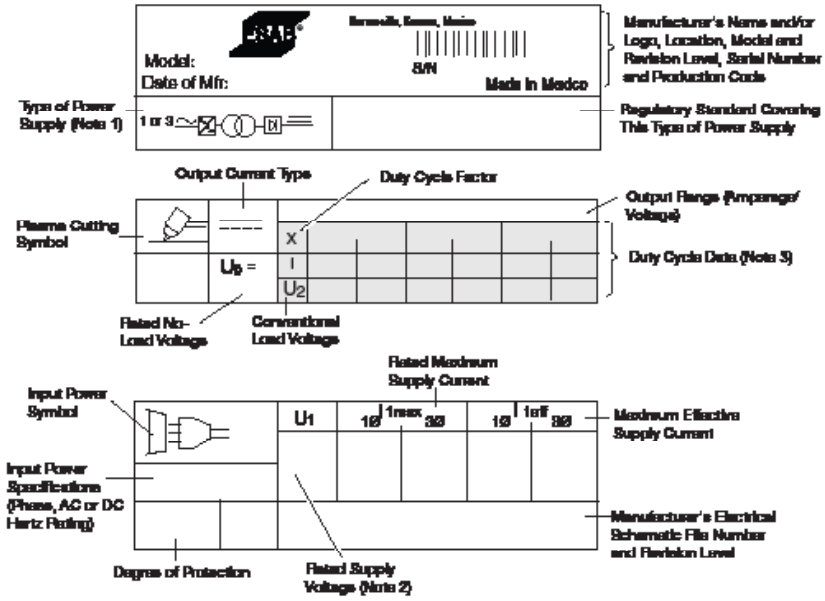

NOTES:

1. Symbol shown indicates single- or three-phase AC input, static frequency converter-transformer-rectifier, DC output.
2. Indicates input voltages for this power supply. Most power supplies carry a label on the bottom of the unit showing input voltage requirements for the power supply as built.
3. Top row: Duty cycle values.
   IEC duty cycle value is calculated as specified by the International ElectroTechnical Commission.
   TDC duty cycle value is determined under the power supply manufacturer's test procedures.
   Second row: Rated cutting current values.
   Third row: Conventional load voltage values.
4. Sections of the Data Tag may be applied to separate areas of the power supply.

Standard Symbols

~	AC
⎓	DC
Ø	Phase

Area A-1320

APPENDIX 2: TORCH PIN - OUT DIAGRAMS

A. Hand Torch Pin - Out Diagram

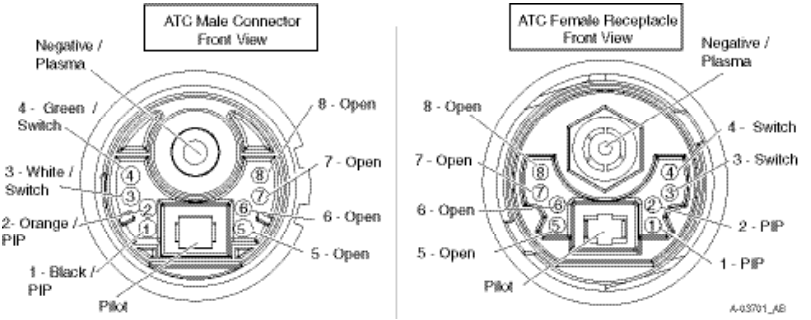

B. Mechanized (Machine) Torch Pin - Out Diagram

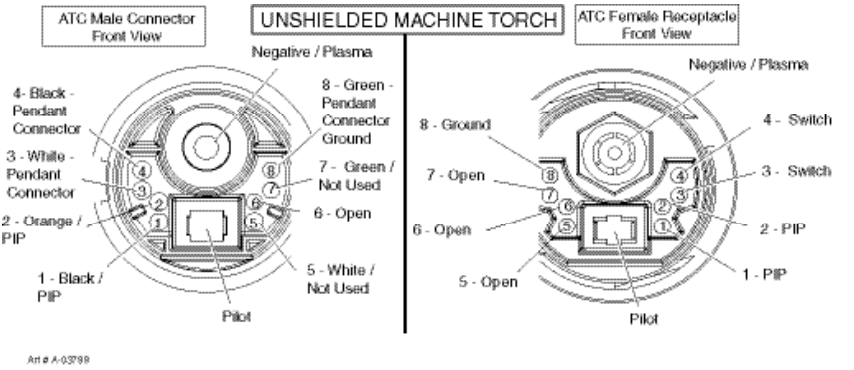

C. Automation SL100SV Torch Pin - out Diagram

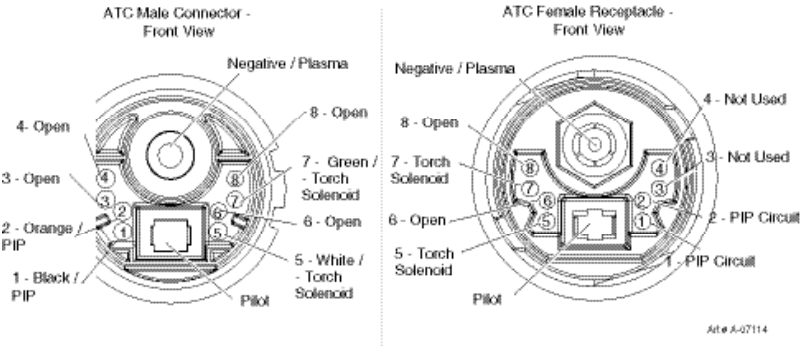

APPENDIX 3: TORCH CONNECTION DIAGRAMS

A. Hand Torch Connection Diagram

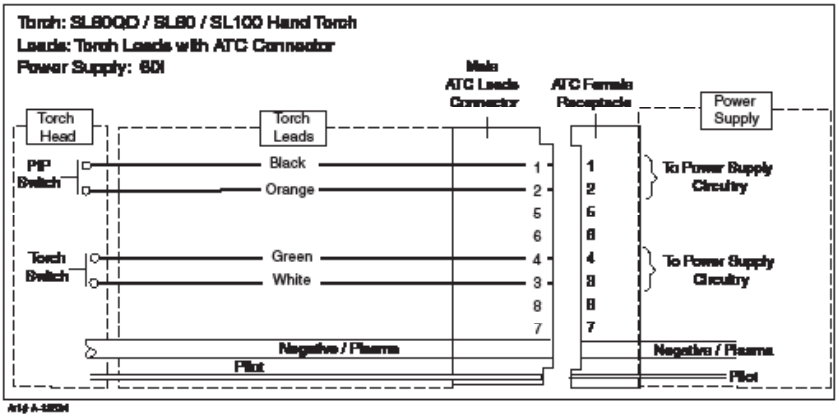

B. Mechanized Torch Connection Diagram

