ESAB Fabricator® 252i

3-IN-1 Multi Process Welding Systems

Operating Manual

3 IN 1 MIG • STICK • TIG

Intertek 3163339

QR CODE | MIG | STICK | TIG LIFT TIG | OUTPUT DC | MAX OUTPUT 300 AMPS | VOLTAGE 208/230V | INPUT POWER 1 PHASE | HERTZ 50/60 | THERMAL OVERLOAD | WARRANTY 3 YEAR

Révision : AB	**Issue Date:** September 30, 2016	**Manual No.:** 0-5423

esab.com

WE APPRECIATE YOUR BUSINESS!

Congratulations on your new ESAB product. We are proud to have you as our customer and will strive to provide you with the best service and reliability in the industry. This product is backed by our extensive warranty and world-wide service network. To locate your nearest distributor or service agency, visit us on the web at **www.esab.com**.

This Operating Manual has been designed to instruct you on the correct use and operation of your ESAB product. Your satisfaction with this product and its safe operation is our ultimate concern. Therefore please take the time to read the entire manual, especially the Safety Precautions. They will help you to avoid potential hazards that may exist when working with this product.

YOU ARE IN GOOD COMPANY!

The Brand of Choice for Contractors and Fabricators Worldwide.
ESAB is a Global Brand of manual and automation Plasma Cutting Products.

We distinguish ourselves from our competition through market-leading, dependable products that have stood the test of time. We pride ourselves on technical innovation, competitive prices, excellent delivery, superior customer service and technical support, together with excellence in sales and marketing expertise.

Above all, we are committed to developing technologically advanced products to achieve a safer working environment within the welding industry.

WARNING
Read and understand this entire Manual and your employer's safety practices before installing, operating, or servicing the equipment.
While the information contained in this Manual represents the Manufacturer's best judgement, the Manufacturer assumes no liability for its use.

Plasma Cutting Power Supply
ESAB Fabricator® 252i 3-in-1 Multi Process Welding Systems™
Operating Manual Number 0-5423

Published by:
ESAB
2800 Airport Rd.
Denton, TX 76208

www.esab.com

Copyright 2015, 2016 by ESAB

All rights reserved.

Reproduction of this work, in whole or in part, without written permission of the publisher is prohibited.

The publisher does not assume and hereby disclaims any liability to any party for any loss or damage caused by any error or omission in this Manual, whether such error results from negligence, accident, or any other cause.

Original Publication Date: September 1, 2015
Revision Date: September 30, 2016

Record the following information for Warranty purposes:

Where Purchased:_____ _____

Purchase Date:_____ _____

Power Supply Serial #:_____ _____

Torch Serial #:_____ _____

Be sure this information reaches the operator.
You can get extra copies through your supplier.

CAUTION

These INSTRUCTIONS are for experienced operators. If you are not fully familiar with the principles of operation and safe practices for arc welding and cutting equipment, we urge you to read our booklet, "Precautions and Safe Practices for Arc Welding, Cutting, and Gouging," Form 52-529. Do NOT permit untrained persons to install, operate, or maintain this equipment. Do NOT attempt to install or operate this equipment until you have read and fully understand these instructions. If you do not fully understand these instructions, contact your supplier for further information. Be sure to read the Safety Precautions before installing or operating this equipment.

USER RESPONSIBILITY

This equipment will perform in conformity with the description thereof contained in this manual and accompanying labels and/or inserts when installed, operated, maintained and repaired in accordance with the instructions provided. This equipment must be checked periodically. Malfunctioning or poorly maintained equipment should not be used. Parts that are broken, missing, worn, distorted or contaminated should be replaced immediately. Should such repair or replacement become necessary, the manufacturer recommends that a telephone or written request for service advice be made to the Authorized Distributor from whom it was purchased.

This equipment or any of its parts should not be altered without the prior written approval of the manufacturer. The user of this equipment shall have the sole responsibility for any malfunction which results from improper use, faulty maintenance, damage, improper repair or alteration by anyone other than the manufacturer or a service facility designated by the manufacturer.

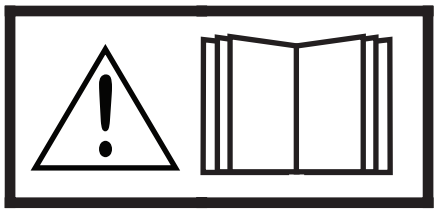

READ AND UNDERSTAND THE INSTRUCTION MANUAL BEFORE INSTALLING OR OPERATING.
PROTECT YOURSELF AND OTHERS!

TABLE OF CONTENTS

SECTION 1: SAFETY 1-1

1.0 Safety Precautions 1-1

SECTION 2: SYSTEM INTRODUCTION 2-1

2.01 How To Use This Manual 2-1
2.02 Equipment Identification 2-1
2.03 Receipt Of Equipment 2-1
2.04 Description 2-1
2.05 User Responsibility 2-1
2.06 Transportation Methods 2-2
2.07 Packaged Items 2-2
2.08 Duty Cycle 2-3
2.09 Specifications 2-4

SECTION 3: INSTALLATION OPERATION AND SETUP 3-1

3.01 Environment 3-1
3.02 Location 3-1
3.03 Ventilation 3-1
3.04 Mains Supply Voltage Requirements 3-1
3.05 Electromagnetic Compatibility 3-2
3.06 Power Source Controls, Indicators and Features 3-3
3.07 Advanced Features Details 3-6
3.08 Attaching the ESAB Fusion 250A MIG Gun 3-13
3.09 Installing a 12.5 lb spool (8" diameter) 3-13
3.10 Installing a Standard Spool (12" diameter) 3-14
3.11 Inserting Wire into the Feed Mechanism 3-15
3.12 Feed Roller Pressure Adjustment 3-16
3.13 Feed Roller Alignment 3-16
3.14 Changing the Feed Roll 3-17
3.15 Input And Output Wire Guide Installation 3-18
3.16 Wire Reel Brake 3-19
3.17 Shielding Gas Regulator Operating Instructions 3-19
3.18 Set-up MIG (GMAW) Welding with Gas Shielded MIG Wire 3-22
3.19 Set-up for MIG (FCAW) Welding with Gasless MIG Wire 3-24
3.20 Set-up for LIFT TIG (GTAW) Welding 3-25
3.21 Set-up for STICK Metal Arc Welding (SMAW) 3-26

SECTION 4: BASIC WELDING GUIDE 4-1

4.01 MIG (GMAW/FCAW) Basic Welding Technique 4-1
4.02 MIG (GMAW/FCAW) Welding Troubleshooting 4-5
4.03 STICK (SMAW) Basic Welding Technique 4-8
4.04 STICK (SMAW) Welding Troubleshooting 4-15
4.05 TIG (GTAW) Basic Welding Technique 4-17
4.06 TIG (GTAW) Welding Problems 4-19

TABLE OF CONTENTS

SECTION 5: POWER SOURCE PROBLEMS AND ROUTINE SERVICE REQUIREMENTS 5-1

5.01 Power Source Problems 5-1
5.02 Routine Service and Calibration Requirements 5-2
5.03 Cleaning the Welding Power Source 5-5
5.04 Cleaning the Feed Rolls 5-6

SECTION 6: KEY SPARE PARTS 6-1

6.01 Fabricator 252i Power Supply Replacement Panels 6-1
6.02 ESAB Fusion 250A MIG Gun 6-4

APPENDIX 1: OPTIONS AND ACCESSORIES A-1

APPENDIX 2: FABRICATOR 252i CIRCUIT DIAGRAM A-2

REVISION HISTORY A-4

INTERNATIONAL CONTACT INFORMATION ..... REAR COVER

SECTION 1: SAFETY

1.0 Safety Precautions

Users of ESAB welding and plasma cutting equipment have the ultimate responsibility for ensuring that anyone who works on or near the equipment observes all the relevant safety precautions. Safety precautions must meet the requirements that apply to this type of welding or plasma cutting equipment. The following recommendations should be observed in addition to the standard regulations that apply to the workplace.

All work must be carried out by trained personnel well acquainted with the operation of the welding or plasma cutting equipment. Incorrect operation of the equipment may lead to hazardous situations which can result in injury to the operator and damage to the equipment.

1. Anyone who uses welding or plasma cutting equipment must be familiar with:
   - its operation
   - location of emergency stops
   - its function
   - relevant safety precautions
   - welding and / or plasma cutting
2. The operator must ensure that:
   - no unauthorized person stationed within the working area of the equipment when it is started up.
   - no one is unprotected when the arc is struck.
3. The workplace must:
   - be suitable for the purpose
   - be free from drafts
4. Personal safety equipment:
   - Always wear recommended personal safety equipment, such as safety glasses, flame proof clothing, safety gloves.
   - Do not wear loose fitting items, such as scarves, bracelets, rings, etc., which could become trapped or cause burns.
5. General precautions:
   - Make sure the return cable is connected securely.
   - Work on high voltage equipment **may only be carried out by a qualified electrician**.
   - Appropriate fire extinguishing equipment must be clearly marked and close at hand.
   - Lubrication and maintenance **must not** be carried out on the equipment during operation.

Dispose of electronic equipment at the recycling facility!
In observance of European Directive 2002/96/EC on Waste Electrical and Electronic Equipment and its implementation in accordance with national law, electrical and/or electronic equipment that has reached the end of its life must be disposed of at a recycling facility.
As the person responsible for the equipment, it is your responsibility to obtain information on approved collection stations.
For further information contact the nearest ESAB dealer.

ESAB can provide you with all necessary cutting protection and accessories.

WARNING	**Arc welding and cutting can be injurious to yourself and others. Take precautions when welding and cutting. Ask for your employer's safety practices which should be based on manufacturers' hazard data.**

ELECTRIC SHOCK - Can kill.
- Install and earth (ground) the welding or plasma cutting unit in accordance with applicable standards.
- Do not touch live electrical parts or electrodes with bare skin, wet gloves or wet clothing.
- Insulate yourself from earth and the workpiece.
- Ensure your working stance is safe.

FUMES AND GASES - Can be dangerous to health.
- Keep your head out of the fumes.
- Use ventilation, extraction at the arc, or both, to take fumes and gases away from your breathing zone and the general area.

ARC RAYS - Can injure eyes and burn skin.
- Protect your eyes and body. Use the correct welding / plasma cutting screen and filter lens and wear protective clothing.
- Protect bystanders with suitable screens or curtains.

FIRE HAZARD
- Sparks (spatter) can cause fire. Make sure therefore that there are no inflammable materials nearby.

NOISE - Excessive noise can damage hearing.
- Protect your ears. Use earmuffs or other hearing protection.
- Warn bystanders of the risk.

MALFUNCTION - Call for expert assistance in the event of malfunction.

READ AND UNDERSTAND THE INSTRUCTION MANUAL BEFORE INSTALLING OR OPERATING.

PROTECT YOURSELF AND OTHERS!

WARNING	**Do not use the power source for thawing frozen pipes.**

CAUTION	**Class A equipment is not intended for use in residential locations where the electrical power is provided by the public low-voltage supply system. There may be potential difficulties in ensuring electromagnetic compatibility of class A equipment in those locations, due to conducted as well as radiated disturbances.**	

CAUTION	**This product is solely intended for metal removal. Any other use may result in personal injury and / or equipment damage.**

CAUTION	**Read and understand the instruction manual before installing or operating.**	

SECTION 2: SYSTEM INTRODUCTION

2.01 How To Use This Manual

This Owner's Manual applies to just specification or part numbers listed on page i.
To ensure safe operation, read the entire manual, including the chapter on safety instructions and warnings.
Throughout this manual, the words WARNING, CAUTION, DANGER, and NOTE may appear. Pay particular attention to the information provided under these headings. These special annotations are easily recognized as follows:

NOTE!
An operation, procedure, or background information which requires additional emphasis or is helpful in efficient operation of the system.

CAUTION
A procedure which, if not properly followed, may cause damage to the equipment.

WARNING
A procedure which, if not properly followed, may cause injury to the operator or others in the operating area.

WARNING
Gives information regarding possible electrical shock injury. Warnings will be enclosed in a box such as this.

DANGER
Means immediate hazards which, if not avoided, will result in immediate, serious personal injury or loss of life.

Additional copies of this manual may be purchased by contacting ESAB at the address and phone number in your area listed on back cover of this manual. Include the Owner's Manual number and equipment identification numbers.
Electronic copies of this manual can also be downloaded at no charge in Acrobat PDF format by going to the ESAB web site listed below

http://www.esab.com

2.02 Equipment Identification

The unit's identification number (specification or part number), model, and serial number usually appear on a data tag attached to the rear panel. Equipment which does not have a data tag such as torch and cable assemblies are identified only by the specification or part number printed on loosely attached card or the shipping container. Record these numbers on the bottom of page i for future reference.

2.03 Receipt Of Equipment

When you receive the equipment, check it against the invoice to make sure it is complete and inspect the equipment for possible damage due to shipping. If there is any damage, notify the carrier immediately to file a claim. Furnish complete information concerning damage claims or shipping errors to the location in your area listed in the inside back cover of this manual.
Include all equipment identification numbers as described above along with a full description of the parts in error.
Move the equipment to the installation site before un-crating the unit. Use care to avoid damaging the equipment when using bars, hammers, etc., to un-crate the unit.

2.04 Description

The ESAB Fabricator 252i is a self contained single phase multi process welding power source that is capable of performing MIG (GMAW/FCAW), STICK (SMAW) and Lift TIG (GTAW) welding processes. The Fabricator 252i is equipped with an integrated wire feed unit, digital voltage / amperage meters, power factor correction (PFC) with energy saving technology and a host of other features to satisfy the broad operating needs of the modern welding professional.

The Fabricator 252i is fully compliant to standard IEC 60974.1. The Fabricator 252i MIG provides excellent welding performance across a broad range of applications when used with the correct welding consumables and procedures. The following instructions detail how to correctly and safely set up the machine and give guidelines on gaining the best efficiency and quality from the Power Source. Please read these instructions thoroughly before using the unit.

2.05 User Responsibility

This equipment will perform as per the information contained herein when installed, operated, maintained and repaired in accordance with the instructions provided. This equipment must be checked periodically. Defective equipment (including welding leads) should not be used. Parts that are broken, missing, plainly worn, distorted or contaminated, should be replaced immediately. Should such repairs or replacements become necessary, it is recommended that such repairs be carried out by appropriately qualified persons approved by ESAB. Advice in this regard can be obtained by contacting an Accredited ESAB Distributor.
This equipment or any of its parts should not be altered from standard specification without prior written approval of ESAB.
The user of this equipment shall have the sole responsibility for any malfunction which results from improper use or unauthorized modification from standard specification, faulty maintenance, damage or improper repair by anyone other than appropriately qualified persons approved by ESAB.

2.06 Transportation Methods

WARNING
ELECTRIC SHOCK can kill. DO NOT TOUCH live electrical parts. Disconnect input power conductors from de-energized supply line before moving the welding power source.

WARNING
FALLING EQUIPMENT can cause serious personal injury and equipment damage.

Lift unit with integrated hand holds at the front and rear of the unit.
Use handcart or similar device of adequate capacity.
If using a fork lift vehicle, place and secure unit on a proper skid before transporting.

2.07 Packaged Items

Fabricator 252i Part No. (W1004401)

- Fabricator 252i Power Supply
- 15 ft ESAB® Fusion 250 Amp MIG Gun
- Velocity Contact tips (1 each)
    - .030" (0.8 mm)
    - .035" (0.9 mm)
    - .045" (1.2 mm)
- Victor® Argon Regulator / Gauge & 10 ft. (3M) Hose
- ESAB WeldSkill 200 Amp electrode holder with 13 ft. (4 M) lead
- ESAB WeldSkill 200 Amp ground clamp with 10 ft. (3 M) lead
- Drive Rolls:
    - .035" / .045" (0.9 to 1.2 mm) V Grooved Lower & Flat Upper (Fitted)
    - .045" (1.2 mm) Flux Cored Roll
- Operating Manual
- 9 ft. (2.75 M) Power cord & NEMA 6-50P 230V AC Plug

Figure 2-2: Packaged Items

2.08 Duty Cycle

The rated duty cycle of a Welding Power Source is a statement of the time it may be operated at its rated welding current output without exceeding the temperature limits of the insulation of the component parts. To explain the 10 minute duty cycle period the following example is used. Suppose a Welding Power Source is designed to operate at a 40% duty cycle, 250 amperes at 26.5 volts. This means that it has been designed and built to provide the rated amperage (250A) for 4 minutes, i.e. arc welding time, out of every 10 minute period (40% of 10 minutes is 4 minutes). During the other 6 minutes of the 10 minute period the Welding Power Source must idle and be allowed to cool.

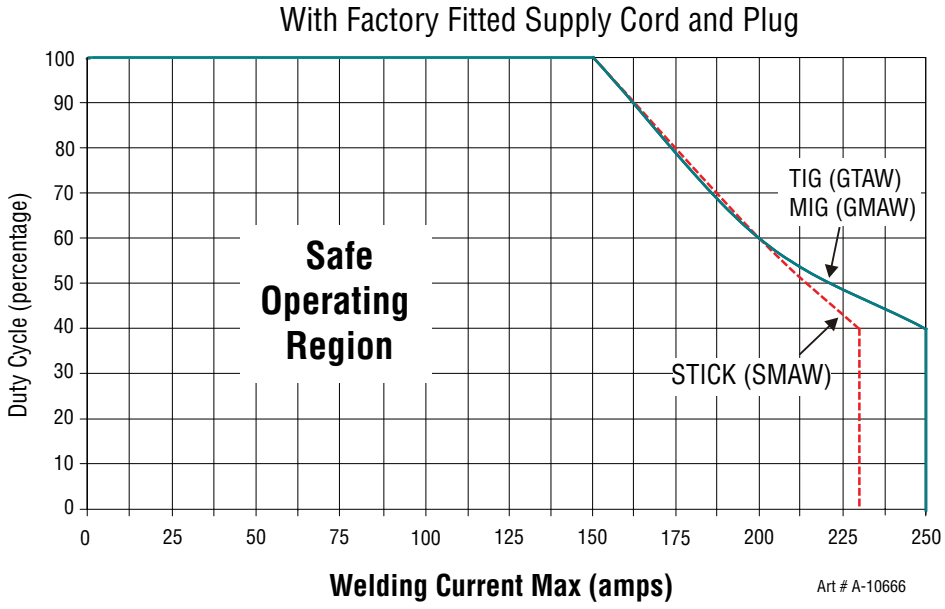

Figure 2-3: Fabricator 252i Duty Cycle with Upgraded Supply Lead and Plug

2.09 Specifications

Description	*Fabricator 252i MULTI PROCESS WELDING INVERTER*
Power Source Dimensions	*H 17.5" x W 10.25" x D 23.5"*
Power Source Mass	*65 lbs.*
Cooling	*Fan Cooled*
Welder Type	*Multi Process Power Source*
Standard	*IEC60974.1*
Number of Phases	*Single Phase*
Nominal Supply Voltage	*208/230 VAC ± 15%*
Supply Voltage Range	*187 - 265 VAC*
Nominal Supply Frequency	*50/60Hz*
Open Circuit Voltage	*72 VDC*
MIG Voltage Range	*14-30 VDC*
Wirefeeder Speed Range	*67 - 700 ipm (1.7 - 17.8 M/min.)*
Protection Class	*IP23S*
Supply Lead & Plug Rating	*50 Amps (10 AWG)*
Welding Current Range (MIG Mode)	*20-300 Amps*
Welding Current Range (LIFT TIG Mode)	*5-300 Amps*
Welding Current Range (STICK Mode)	*20-230 Amps*
Effective Input Current (I1eff)	*22.4 Amps*
Maximum Input Current (I1max)	*34.7 Amps*
Single Phase Generator Requirement	*10 kVA*
MIG (GMAW) Welding Output, 40°C, 10 min.	*250A @ 40%,26.5V* *200A @ 60%, 24V* *150A @ 100%, 21.5V*
STICK (SMAW) Welding Output, 40°C, 10 min.	*230A @ 40%,29.2V* *200A @ 60%, 28V* *150A @ 100%, 26V*
TIG (GTAW) Welding Output, 40°C, 10 min.	*250A @ 40%,20V* *200A @ 60%, 18V* *150A @ 100%, 16V*

Table 2-1: Fabricator 252i Specification

NOTE!
Due to variations that can occur in manufactured products, claimed performance, voltages, ratings, all capacities, measurements, dimensions and weights quoted are approximate only. Achievable capacities and ratings in use and operation will depend upon correct installation, use, applications, maintenance and service.

SECTION 3: INSTALLATION OPERATION AND SETUP

3.01 Environment

This unit is designed for use in environments with increased hazard of electric shock as outlined in IEC 60974.1. Additional safety precautions may be required when using unit in an environment with increased hazard of electric shock. Please refer to relevant local standards for further information prior to using in such areas.

A. Examples of environments with increased hazard of electric shock are:

1. In locations in which freedom of movement is restricted, so that the operator is forced to perform the work in a cramped (kneeling, sitting or lying) position with physical contact with conductive parts.
2. In locations which are fully or partially limited by conductive elements, and in which there is a high risk of unavoidable or accidental contact by the operator.
3. In wet or damp hot locations where humidity or perspiration considerably reduces the skin resistance of the human body and the insulation properties of accessories.

B. Environments with increased hazard of electric shock do not include places where electrically conductive parts in the near vicinity of the operator, which can cause increased hazard, have been insulated.

3.02 Location

Be sure to locate the welder according to the following guidelines:

A. In areas, free from moisture and dust.

B. Ambient temperature between 32° F to 104° F.

C. In areas, free from oil, steam and corrosive gases.

D. In areas, not subjected to abnormal vibration or shock.

E. In areas, not exposed to direct sunlight or rain.

F. Place at a distance of 1 foot or more from walls or similar that could restrict natural air flow for cooling.

G. The enclosure design of this power source meets the requirements of IP23S as outlined in IEC60529.

H. Precautions must be taken against the power source toppling over. The power source must be located on a suitable horizontal surface in the upright position when in use.

WARNING
This equipment should be electrically connected by a qualified electrician.

3.03 Ventilation

WARNING
Since the inhalation of welding fumes can be harmful, ensure that the welding area is effectively ventilated.

3.04 Mains Supply Voltage Requirements

CAUTION
The Mains supply voltage should be within ± 15% of the rated Mains supply voltage. Too low of a supply voltage may cause poor welding performance or wirefeeder malfunction. Too high of a supply voltage will cause components to overheat and possibly fail.

WARNING
The Fabricator 252i must be electrically connected by a qualified electrical tradesperson. Damage to the PCA (Power Control Assembly) could occur if 276 VAC or higher is applied to the Primary Power Cable.

WARNING
ELECTRIC SHOCK can kill; SIGNIFICANT DC VOLTAGE is present after removal of input power. DO NOT TOUCH live electrical parts.

SHUT DOWN welding power source, disconnect input power employing lockout/tagging procedures. Lock-out/tagging procedures consist of padlocking line disconnect switch in open position, removing fuses from fuse box, or shutting OFF and red-tagging circuit breaker or other disconnecting device.

Electrical Input Requirements

Operate the welding power source from a single-phase 50/60 Hz, AC power source. The Welding Power Source must be:

- Correctly installed, if necessary, by a qualified electrician.
- Correctly earthed (electrically) in accordance with local regulations.
- Connected to the correct size power point, fuse and primary supply lead based on Table 3-1.

WARNING
Any electrical work must be carried out by a qualified Electrical Tradesperson.

50/60 Hz Single Phase	Primary Supply Lead Size	Minimum Primary Current Circuit Size (Vin/Iin)	Minimum Plug Size	Current & Duty Cycle		
				MIG	LIFT TIG	STICK
Yes	10 AWG	208-230/50A	50A	40% @ 250A	40% @ 250A	40% @ 230A

Table 3-1: Input Power Source Leads for Fabricator 252i

3.05 Electromagnetic Compatibility

WARNING
Extra precautions for Electromagnetic Compatibility may be required when this Welding Power Source is used in a domestic situation.

A. Installation and Use - Users Responsibility

The user is responsible for installing and using the welding equipment according to the manufacturer's instructions. If electromagnetic disturbances are detected then it shall be the responsibility of the user of the welding equipment to resolve the situation with the technical assistance of the manufacturer. In some cases this remedial action may be as simple as earthing the welding circuit, see NOTE below. In other cases it could involve constructing an electromagnetic screen enclosing the Welding Power Source and the work, complete with associated input filters. In all cases, electromagnetic disturbances shall be reduced to the point where they are no longer Troublesome.

NOTE!
The welding circuit may or may not be earthed for safety reasons. Changing the earthing arrangements should only be authorized by a person who is competent to assess whether the changes will increase the risk of injury, e.g. by allowing parallel welding current return paths which may damage the earth circuits of other equipment. Further guidance is given in IEC 60974-13 Arc Welding Equipment - Installation and use (under preparation).

B. Assessment of Area

Before installing welding equipment, the user shall make an assessment of potential electromagnetic problems in the surrounding area. The following shall be taken into account.

1. Other supply cables, control cables, signaling and telephone cables; above, below and adjacent to the welding equipment.
2. Radio and television transmitters and receivers.
3. Computer and other control equipment.
4. Safety critical equipment, e.g. guarding of industrial equipment.
5. The health of people around, e.g. the use of pace-makers and hearing aids.
6. Equipment used for calibration and measurement.
7. The time of day that welding or other activities are to be carried out.
8. The immunity of other equipment in the environment: the user shall ensure that other equipment being used in the environment is compatible: this may require additional protection measures.

The size of the surrounding area to be considered will depend on the structure of the building and other activities that are taking place. The surrounding area may extend beyond the boundaries of the premises.

C. Methods of Reducing Electromagnetic Emissions

1. Mains Supply

   Welding equipment should be connected to the mains supply according to the manufacturer's recommendations. If interference occurs, it may be necessary to take additional precautions such as filtering of the mains supply. Consideration should be given to shielding the supply cable of permanently installed welding equipment in metallic conduit or equivalent. Shielding should be electrically continuous throughout its length. The shielding should be connected to the Welding Power Source so that good electrical contact is maintained between the conduit and the Welding Power Source enclosure.

2. Maintenance of Welding Equipment

   The welding equipment should be routinely maintained according to the manufacturer's recommendations. All access and service doors and covers should be closed and properly fastened when the welding equipment is in operation. The welding equipment should not be modified in any way except for those changes and adjustments covered in the manufacturer's instructions.

3. Welding Cables

   The welding cables should be kept as short as possible and should be positioned close together but never coiled and running at or close to the floor level.

4. Equipotential Bonding

   Bonding of all metallic components in the welding installation and adjacent to it should be considered. However, metallic components bonded to the work piece will increase the risk that the operator could receive a shock by touching the metallic components and the electrode at the same time. The operator should be insulated from all such bonded metallic components.

5. Earthing/grounding of the Work Piece

   Where the work piece is not bonded to earth for electrical safety, nor connected to earth because of its size and position, e.g. ship's hull or building steelwork, a connection bonding the work piece to earth may reduce emissions in some, but not all instances. Care should be taken to prevent the earthing of the work piece increasing the risk of injury to users, or damage to other electrical equipment. Where necessary, the connection of the work piece to earth should be made by direct connection to the work piece, but in some countries where direct connection is not permitted, the bonding should be achieved by suitable capacitance, selected according to national regulations.

6. Screening and Shielding

   Selective screening and shielding of other cables and equipment in the surrounding area may alleviate problems of interference. Screening the entire welding installation may be considered for special applications.

3.06 Power Source Controls, Indicators and Features

Figure 3-1: Fabricator Control Panel

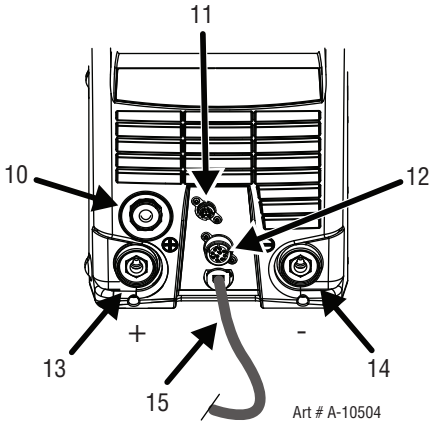

Figure 3-2: Fabricator Front Connections

WARNING
DO NOT TOUCH the electrode wire while it is being fed through the system. The electrode wire will be at welding voltage potential.

1. Power Indicator

The green power indicator will be illuminated when the welder is turned ON and indicates the presence of power.

2. Fault Indicator

The yellow fault indicator will be illuminated when any of the faults are detected. ALL Faults will illuminate the indicator

3. Weld Process Selection Button

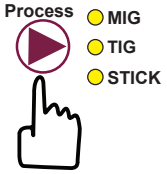

Press and release this button to change the selected weld process mode from MIG to LIFT TIG to STICK. The weld process will change to the next process in the sequence each time the button is pressed and released. The red indicators next to the button will illuminate to identify MIG or LIFT TIG or STICK process mode.

WARNING
When the Power light is lit, the machine is connected to the Mains supply voltage and the internal electrical components are at Mains voltage potential.

4. 2T - 4T Trigger Latch Button

Press and release the button to change the selected operating mode of the trigger. The selected mode can be either “2T” (unlatched) or “4T” (latched) operation. The red indicator next to the button will illuminate to identify which mode is selected (2T or 4T). In the 4T mode once the weld has been started you can release the trigger and continue welding until the trigger is activated again or the welding arc is broken to stop the welding arc.

5. Advanced Features Button

Press and release the Advanced Features button to enter or exit from the advanced programming mode. To exit, simply press and release the button again. Any changes made are saved. The advanced programming menu items are described in detail for each welding mode in Section 3.07.

Gas Purge. In addition, the Advanced Features Button is used to initiate a 30 second gas line purge function to fill the gas line with the shielding gas from the connected gas cylinder. To start the gas purge function, simply press and hold the button for approximately two (2) seconds. Once the Gas purge function has started, a countdown timer will show in the left alpha-numeric display indicating the number of seconds remaining before the purge will be automatically terminated. You can stop the Gas purge any time during the 30 seconds by quickly pressing and releasing the button again.

6. Left Knob: Amperage Control (Wirespeed)

The amperage control knob adjusts the amount of welding current delivered by the power source. In STICK and LIFT TIG modes, the amperage control knob directly adjusts the power inverter to deliver the desired level of output current. In MIG mode, the amperage knob adjusts the speed of the wire feed motor (which in turn adjusts the output current by varying the amount of MIG wire delivered to the welding arc). The optimum wire speed required is dependent on the type of welding application. The setup chart on the inside of the wire feed compartment door provides a brief summary of the required output settings for a basic range of MIG welding applications. The value may also be adjusted while a weld is in progress – if this occurs, the left display will briefly switch to show the adjusted value as the knob is turned, and will automatically revert back to showing the weld current measurements when the knob is not being turned.

7. Right Knob: Multifunction Control - MIG Voltage / Arc Control (Inductance) & STICK Arc Force

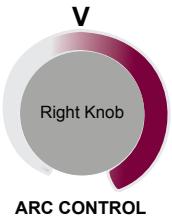

MIG Voltage Control

In this mode the control knob is used to adjust the output voltage of the power source. The welding voltage is increased by turning the knob clockwise or decreased by turning the knob anti-clockwise. The optimum voltage level required is dependent on the type of welding application. The setup chart on the inside of the wire feed compartment door provides a brief summary of the required output settings for a basic range of MIG welding applications. The value may also be adjusted while a weld is in progress – if this occurs, the left display will briefly switch to show the adjusted value as the knob is turned, and will automatically revert back to showing the weld current measurements when the knob is not being turned.

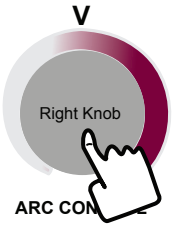

MIG Arc Control (Inductance)

The arc control operates in MIG mode only and is used to adjust the intensity of the welding arc. To access the Arc Control function, push inward on the right knob and hold it for approximately 2 seconds. This feature can be accessed and adjusted during welding.

When STICK Mode is Selected

In this mode the multifunction control knob is used to adjust arc force. Arc force control provides an adjustable amount of welding force (or “dig”) control. This feature can be particularly beneficial in providing the operator the ability to compensate for variability in joint fit-up in certain situations with particular electrodes. In general increasing the arc force control toward ‘100%’ (maximum arc force) allows greater penetration control to be achieved. Arc force is increased by turning the control knob clockwise or decreased by turning the knob anti-clockwise. This feature can be accessed and adjusted during welding.

To access the Arc Control function, push inward on the right knob and hold it for approximately 2 seconds. This feature can be accessed and adjusted during welding.

The left display will change to show the Arc Control parameter name that is in effect for the current MIG or STICK Modes and the right display will show its present value. Use the right knob to change the value. When the desired value is selected, press inward again on the knob without turning it and release it to exit the Arc Control function and save the value.

8. Left Digital Display

MIG Mode

This digital meter is used to display the pre-set (preview) Wirefeed Speed in Inches Per Minute (IPM) in MIG mode and actual welding amperage of the power source when welding. At times of non-welding, the digital meter will display a pre-set (preview) value of Wirefeed Speed. This value can be adjusted by varying the Left Knob (Control No 6).

STICK and LIFT TIG Modes

The digital meter is used to display the pre-set (preview) amperage in STICK / LIFT TIG modes and actual welding amperage of the power source when welding. At times of non-welding, the amperage meter will display a pre-set (preview) value in both STICK and LIFT TIG modes. This value can be adjusted by varying the Left Knob (Control No 6).

When welding, this digital meter will display actual welding amperage in all modes.

At the completion of welding, the digital meter will hold the last recorded amperage value for a period of approximately 10 seconds in all modes. The amperage meter will hold the value until; (1) any of the front panel controls are adjusted in which case the unit will revert to preview mode, (2) welding is recommenced, in which case actual welding amperage will be displayed, or (3) a period of 10 seconds elapses following the completion of welding in which case the unit will return to preview mode.

The display is also used for providing error messages to the user and showing other information, which will be explained in Section 5.

9. Right Digital Display

MIG Mode

This digital meter is used to display the pre-set (preview) Voltage in MIG mode and actual welding voltage of the power source when welding. At times of non-welding, the digital meter will display a pre-set (preview) value of Voltage. This value can be adjusted by varying the Right Knob (Control No 7).

STICK and LIFT TIG Modes

This digital meter is used to display the Welding Output Terminal Voltage in STICK / LIFT TIG modes during non-welding or welding. This value can not be adjusted by varying the Right Knob (Control No 7).

When welding, this digital meter will display actual welding voltage in all modes.

At the completion of welding, the digital meter will hold the last recorded voltage value for a period of approximately 10 seconds in all modes. The voltage meter will hold the value until; (1) any of the front panel controls are adjusted in which case the unit will revert to preview mode, (2) welding is recommenced, in which case actual welding amperage will be displayed, or (3) a period of 10 seconds elapses following the completion of welding in which case the unit will return to preview mode.

The display is also used for providing error messages to the user and showing other information, which will be explained in Section 5.

Weld Modes	Arc Control Function	Left Display	Right Display	Limits
MIG	Inductance	INDU	25% (default)	0 – 100 %
STICK	Arc Force	ARC- / FRCE	50% (default)	0 – 100%

Table 3-2

13. Positive Welding Output Terminal

The positive welding terminal is used to connect the welding output of the power source to the appropriate welding accessory such as the Fusion MIG Gun (via the MIG Gun polarity lead), electrode holder lead or work lead. Positive welding current flows from the power source via this heavy duty bayonet type terminal. It is essential, however, that the male plug is inserted and turned securely to achieve a sound electrical connection.

CAUTION
Loose welding terminal connections can cause overheating and result in the male plug being fused in the bayonet terminal.

14. Negative Welding Output Terminal

The negative welding terminal is used to connect the welding output of the power source to the appropriate welding accessory such as the MIG Gun (via the MIG Gun polarity lead), LIFT TIG torch or work lead. Negative welding current flows to the power source via this heavy duty bayonet type terminal. It is essential, however, that the male plug is inserted and turned securely to achieve a sound electrical connection.

CAUTION
Loose welding terminal connections can cause overheating and result in the male plug being fused in the bayonet terminal.

15. MIG Gun Polarity Lead

The polarity lead is used to connect the MIG Gun to the appropriate positive or negative output terminal (allowing polarity reversal for different welding applications). In general, the polarity lead should be connected in to the positive welding terminal (+) when using steel, stainless steel or aluminum electrode wire. When using gasless wire, the polarity lead is generally connected to the negative welding terminal (-). If in doubt, consult the manufacturer of the electrode wire for the correct polarity. It is essential, however, that the male plug is inserted and turned securely to achieve a sound electrical connection.

CAUTION
Loose welding terminal connections can cause overheating and result in the male plug being fused in the bayonet terminal.

3.07 Advanced Features Details

NOTE!
The Local / Remote setting will only be saved while in that welding process. Once the welding process is changed the setting will revert to the factory default.

General Operation

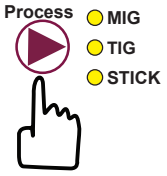

Select the weld process (Control No 3) you wish to view Advanced Features for.

Then press and release the Advanced Features button (Control No 5) to enter or exit from the Advanced Features programming function of the welder.

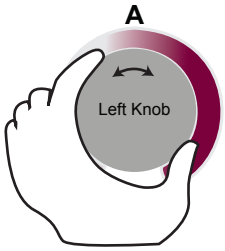

The Advanced Features menu items are viewed by turning the left knob (Control No 6) to move forward or backward through the list. The function names in the menu will be displayed in abbreviated form in the left alpha-numeric display. In the case of two part names or abbreviations, the left display will alternately flash the first part of the function name and then the second part, followed by a brief “blank” interval. For each function, the right alpha-numeric display will show its present value.

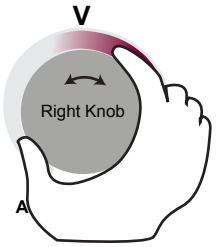

To change the value of that parameter, simply turn the right knob (Control No 7) to change it. If the setting has been changed from its previous value the welder will save the new value when the left knob is turned to view the next parameter, or if the user activates a control to cause the welder to exit Advanced Features mode as described earlier. Once the beginning or end of the menu list is reached, additional turning of the left knob in that direction will not result in any change of the displayed parameter.
The Advanced Features control functions are in order with the user's process steps when setting up to operate the welder in the selected welding process modes (MIG, LIFT TIG, STICK). The menu functions shown in Advanced Features Mode are mostly dependent on the currently selected weld process mode of the machine.

10. MIG Gun Adaptor

The MIG Gun Adapter is the connection point for the ESAB Fusion 250A MIG Gun. Refer to section 3.08 for the correct procedure for attaching the ESAB Fusion 250A MIG Gun.

11. Remote Control Socket

The 8 pin Remote Control Socket is used to connect remote control devices to the welding power source. To make connections, align keyway, insert plug, and rotate threaded collar fully clockwise.

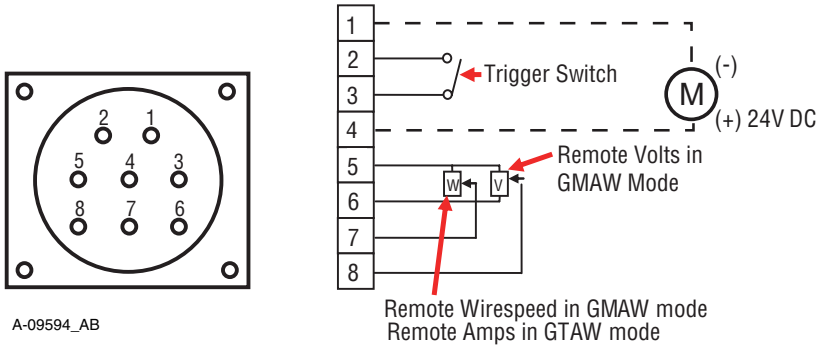

Figure 3-3: Remote Control Socket

Socket Pin	Function
1	Not connected
2	Trigger Switch Input
3	Trigger Switch Input
4	Not connected
5	5k ohm (maximum) connection to 5k ohm remote control potentiometer.
6	Zero ohm (minimum) connection to 5k ohm remote control potentiometer.
7	Wiper arm connection to 5k ohm remote control Wirespeed MIG mode potentiometer. Wiper arm connection to 5k ohm remote control Amps LIFT TIG mode potentiometer.
8	Wiper arm connection to 5k ohm remote control Volts MIG mode potentiometer.

Table 3-3

NOTE!
The remote local setting on the control panel should be set to remote for the remote wire feeder amperage/voltage controls to be operative.

12. 10 Pin Accessories Socket

The 10 pin Accessories Socket is used to connect remote devices such as a spool gun to the welding power source. To make connections, align keyway, insert plug, and rotate threaded collar fully clockwise.

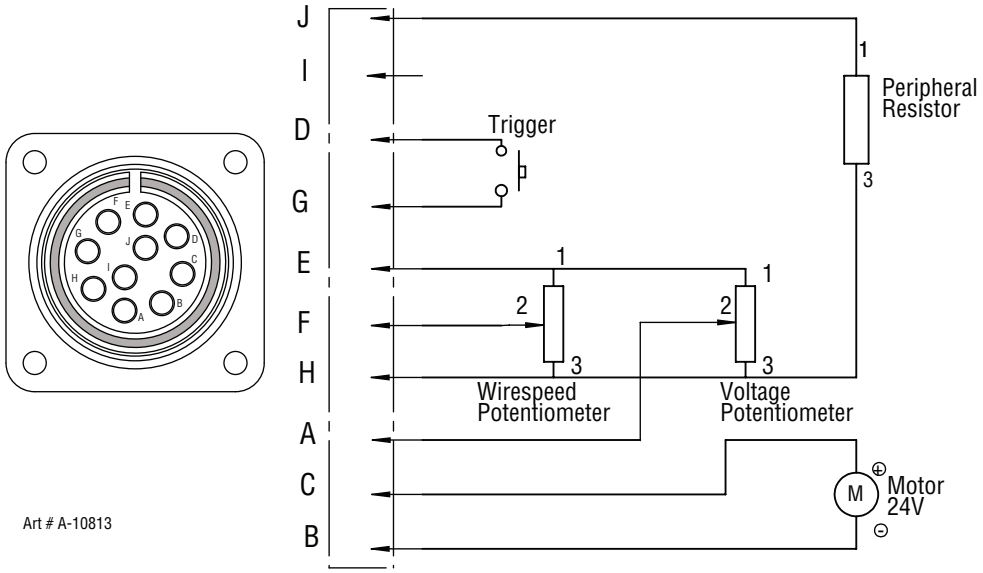

Figure 3-4: Remote Control Socket

Socket Pin	Function
A	Voltage Pot. Wiper
B	Wire Feed Motor (-)
C	Wire Feed Motor (+)
D	Trigger Switch Input
E	Wire Speed Pot. & Voltage Pot. (+) CW 10K ohm
F	Wiper Arm Speed Pot.
G	Trigger Switch Input & Solenoid (-)
H	Wire Speed Pot. & Voltage Pot. (-) ACW
I	Solenoid (+)
J	Peripheral Program Resistor

Table 3-4

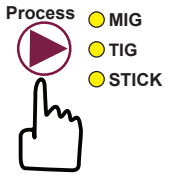

If the welder is in Advanced Features mode and the Weld Process Selection button (Control No 3) is pressed, the welder will exit Advanced Features mode, saving any change made, and change to the next weld process function in the sequence: MIG, LIFT TIG, STICK. (See previous note) If you wish to view the Advanced Features for the next process you will need to enter the Advanced Features function again.

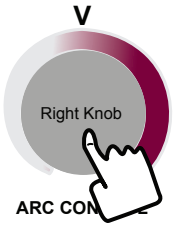

If the welder is in Advanced Features mode and the right knob (Control No 7) is pressed for one (1) second (to enter Arc Control Function) the welder will exit Advanced Features mode, saving any change made, and enter the Arc Control Function for the currently selected weld process.

MIG (GMAW/FCAW)Mode Advanced Features Menu Map

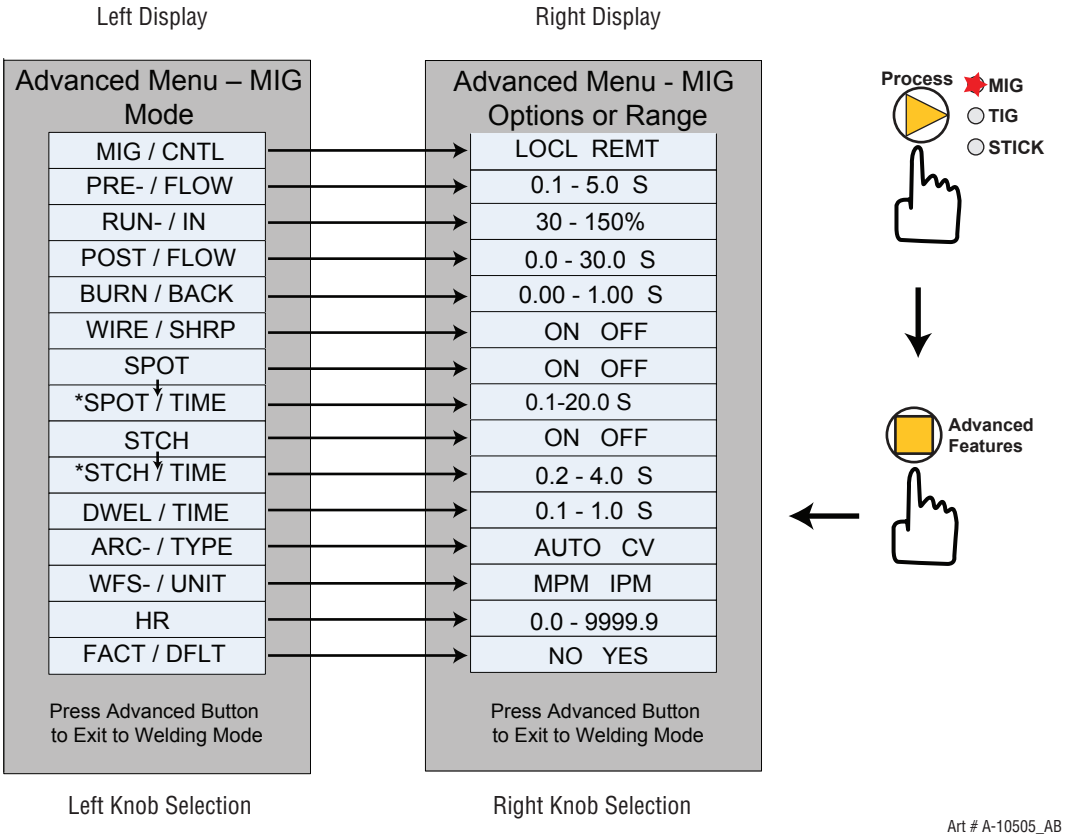

* SPOT TIME and STCH TIME are only active when SPOT or STCH are “ON”.
Note “SPOT” and “STCH” are MUTUALLY EXCLUSIVE functions. If the user enables either function and the system detects that the OTHER function is already ON, the system will automatically turn the OTHER conflicting function OFF.
Left Display: Where (2) items shown, e.g. RUN- / IN, the display will alternate (flash) between the (2) items

Figure 3-5: MIG Advanced Menu

Function	*Left Display*	*Right Display (Factory Default Values)*	*Limits*	*Comments*
MIG Operator Controls	MIG/CNTL	LOCL	LOCL - REMT	LOCL = Local control of the Wirespeed and Voltage with the machines controls. REMT = Remote control of the Wirespeed and Voltage with an accessory device.
Pre Flow (MIG Setting)	PRE-/FLOW	0.1 S	0.0 – 5 S	Shielding gas flows for the time specified before an arc is initiated.
Run In	RUN/IN	70%	30 – 150 %	Wirespeed runs as a percentage of preview wirespeed until an arc is struck.
Post Flow (MIG Setting)	POST/FLOW	0.5 S	0.0 – 30 S	Shielding gas flows for the time specified after an arc has extinguished.
Burn Back	BURN/BACK	0.15 S	0.00 – 1.00 S	The time difference between turning the wire feed OFF before the voltage is turned OFF.
Wire Sharp	WIRE/SHRP	ON	OFF – ON	Wire Sharp adds a burst of current at the end of a weld to remove the ball at the end of the wire. This improves the restart of the next weld.
Spot	SPOT	OFF	OFF – ON	Spot is used to weld two thin plates together at a desired location by melting the top & bottom plates together to form a nugget between them. The weld time is set by the Spot Time.
Spot Time (Only shown/enabled if Spot=ON)	SPOT/TIME	2.0 S	0.1 – 20.0 S	Spot Time is the time used for the Spot weld mode.
Stitch	STCH	OFF	OFF – ON	Stitch is used to weld two or more components by stitch or interval weld together. The weld time is set by the Stitch Time and the non weld time is set by the Dwell Time.
Stitch Time (Only shown/ enabled if Stitch=ON)	STCH/TIME	2.0 S	0.2 – 4.0 S	Stitch Time is the time used for the weld time in Stitch weld mode.
Dwell Time (Only shown/ enabled if Stitch=ON)	DWEL/TIME	0.5 S	0.1 – 1.0 S	Dwell Time is the time used for the non weld time in Stitch weld mode.
Arc Type	ARC-/TYPE	AUTO	AUTO – CV-M	Auto is an optimized arc control for dip transfer welding with minimal spatter on mild steel with mixed shielding gases. CV-M is the traditional constant-voltage arc control for all other welding.
Wire Feed Speed Units	WFS/UNIT	IPM	MPM – IPM	MPM provides preview wirespeed in Meters Per Minute. IPM provides preview wirespeed in Inches Per Minute.
Arc Hour Accumulated Runtime	HR	0.0	0.0 – 9999.9	Provides Arc On Hours that the power source has welded. The number displayed is in hours and read only. It will rollover to 0 once 10,000 hours have been reached.
Restore Factory Defaults	FACT/DFLT	NO	NO – YES	When YES is selected all the user adjustable values in this table (except Arc Hour Accumulated Runtime) are reset to the Factory Default Values.

LIFT TIG Mode Advanced Features Menu Map

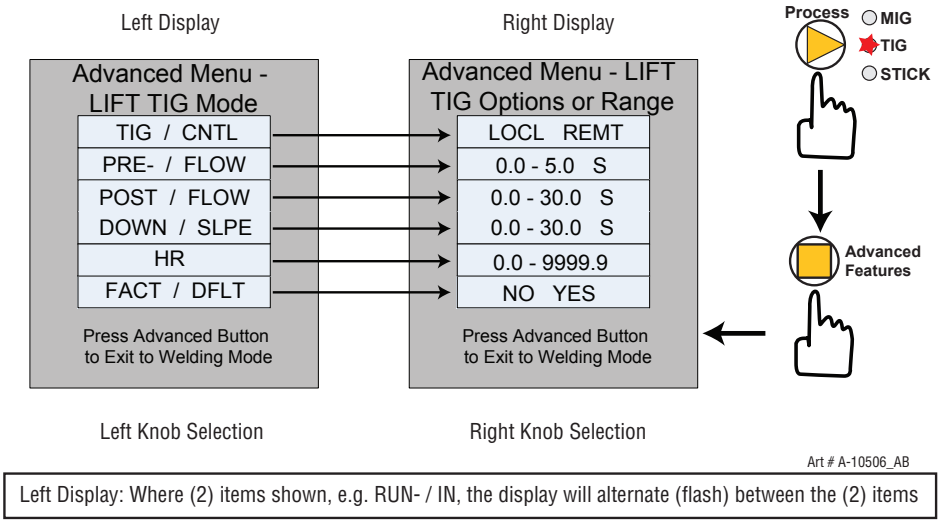

Left Display: Where (2) items shown, e.g. RUN- / IN, the display will alternate (flash) between the (2) items

Figure 3-6: LIFT TIG Advanced Menu

Function	***Left Display***	***Right Display (Factory Default Values)***	***Limits***	***Comments***
LIFT TIG Operator Controls	LIFT TIG/CNTL	REMT	LOCL - REMT	LOCL = Local control of the Amps with the machines controls REMT = Remote control of the Amps with an accessory device
Pre Flow (LIFT TIG Setting)	PRE-/FLOW	0.1 S	0.0 – 5 S	Shielding gas flows for the time specified before an arc is initiated
Post Flow (LIFT TIG Setting)	POST/FLOW	10.0 S	0.0 – 30 S	Shielding gas flows for the time specified after an arc has extinguished
Down Slope	DOWN/SLPE	0.0 S	0.0 – 30 S	In “2T” (unlatched), the unit will enter down slope mode as soon as the trigger switch is released (ie if Down Slope is set to 5.0 S, the unit will ramp down from the present welding current to zero over 5 seconds). In "4T" (latched), to enter down slope mode the trigger switch must be held in for the selected time period (ie press and release trigger switch to commence welding, then press and hold trigger switch again to enter down slope mode). Should the trigger switch be released during the down slope time, the output will cease immediately in "4T" only.
Arc Hour Accumulated Runtime	HR	0.0	0.0 – 9999.9	Provides Arc On Hours that the power source has welded. The number displayed is in hours and read only. It will rollover to 0 once 10,000 hours have been reached.
Restore Factory Defaults	FACT/DFLT	NO	NO – YES	When YES is selected all the user adjustable values in this table (except Arc Hour Accumulated Runtime) are reset to the Factory Default Values.

STICK Mode Advanced Features

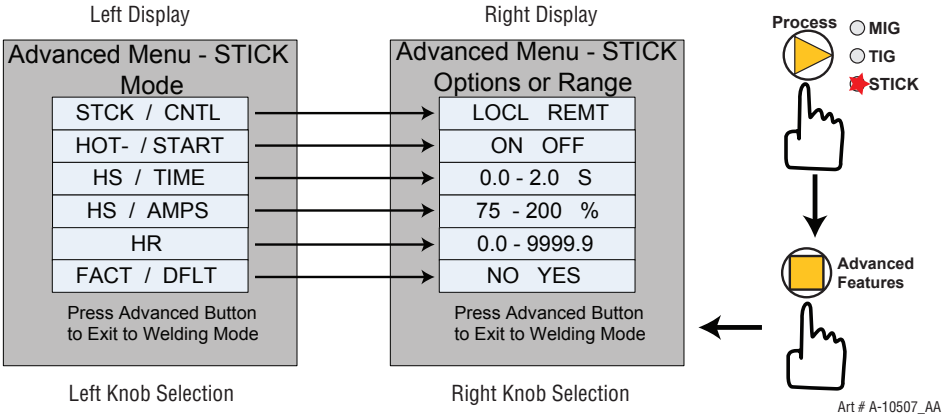

Left Display: Where (2) items shown, e.g. HOT- / STRT, the display will alternate (flash) between the (2) items

Figure 3-7: STICK Advanced Menu

Function	***Left Display***	***Right Display (Factory Default Values)***	***Limits***	***Comments***
STICK Operator Controls	STCK/CNTL	LOCL	LOCL - REMT	LOCL = Local control of the Amps with the machines controls REMT = Remote control of the Amps with an accessory device
Hot Start	HOT/STRT	ON	OFF – ON	Hot Start is used to improve the start characteristics for STICK electrodes, e.g. low hydrogen electrodes.
Hot Start Time	TIME/HS	0.5 S	0.0 - 2.0 S	Hot Start Time is the time that the Hot Start Amps is applied.
Hot Start Amps	AMPS/HS	140%	75 – 200%	Hot Start Amps sets the peak start current, e.g. 100A at 140% = 140A
Arc Hour Accumulated Runtime	HR	0.0	0.0 – 9999.9	Provides Arc On Hours that the power source has welded. The number displayed is in hours and read only. It will rollover to 0 once 10,000 hours have been reached.
Restore Factory Defaults	FACT/DFLT	NO	NO – YES	When YES is selected all the user adjustable values in this table (except Arc Hour Accumulated Runtime) are reset to the Factory Default Values.

3.08 Attaching the ESAB Fusion 250A MIG Gun

1. Unscrew the Locking Screw in the MIG Gun Adapter located inside the Wire Feed Compartment.
2. Push the ESAB Fusion 250A MIG Gun into MIG Gun Adaptor firmly using a twisting action.
3. Lock the ESAB Fusion 250A MIG Gun into the MIG Gun Adaptor by turning the Locking Screw clockwise in the MIG Gun Adapter within the Wire Feed Compartment to secure the ESAB Fusion 250A MIG Gun in position.

NOTE!
Failure to properly lock the ESAB Fusion 250A MIG Gun into the MIG Gun Adapter will result in the ESAB Fusion 250A MIG Gun being pushed out of the MIG Gun Adapter by the MIG welding wire or lack of shielding gas (porosity in the weld) at the weld zone.

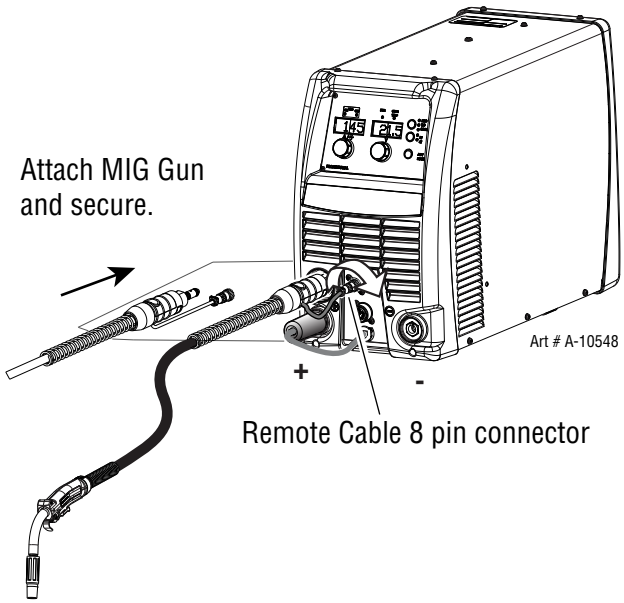

Figure 3-8: Mount Fusion MIG Gun Cable to Adapter Socket

4. If equipped, align the keyways of the MIG Gun Switch connector pigtail with the 8 pin receptacle to the right of the MIG Gun cable and plug them together. Secure by turning the locking ring to the right (clockwise). Refer to Figure 3-8.

NOTE!
When disconnecting the MIG Gun trigger switch leads from the machine, DO NOT pull on the wires. Loosen the locking ring and gently pull the plug out of the socket.

3.09 Installing a 12.5 lb spool (8" diameter)

In order to fit a 12.5 lb spool (8" diameter) assemble parts in the sequence shown in Figure 3-9.
Installation of wire spool.

1. Remove Wire Spool Hub Retaining Clip. Grasp the loop and pull.
2. Place Wire Spool onto the hub, loading it so that the wire will feed off the bottom of the spool as the spool rotates counter clockwise. Make sure to align the spool alignment pin on the hub with the mating hole in the wire spool.
3. Replace the Wire Spool Hub Retaining Clip in the set of holes closest to the spool.

NOTE!
The Hub tension has been pre-adjusted at the factory. However if adjustment is required, refer to section 3.16

CAUTION
Use care in handling the spooled wire as it will tend to “unravel” when loosened from the spool. Grasp the end of the wire firmly and don’t let go of it.

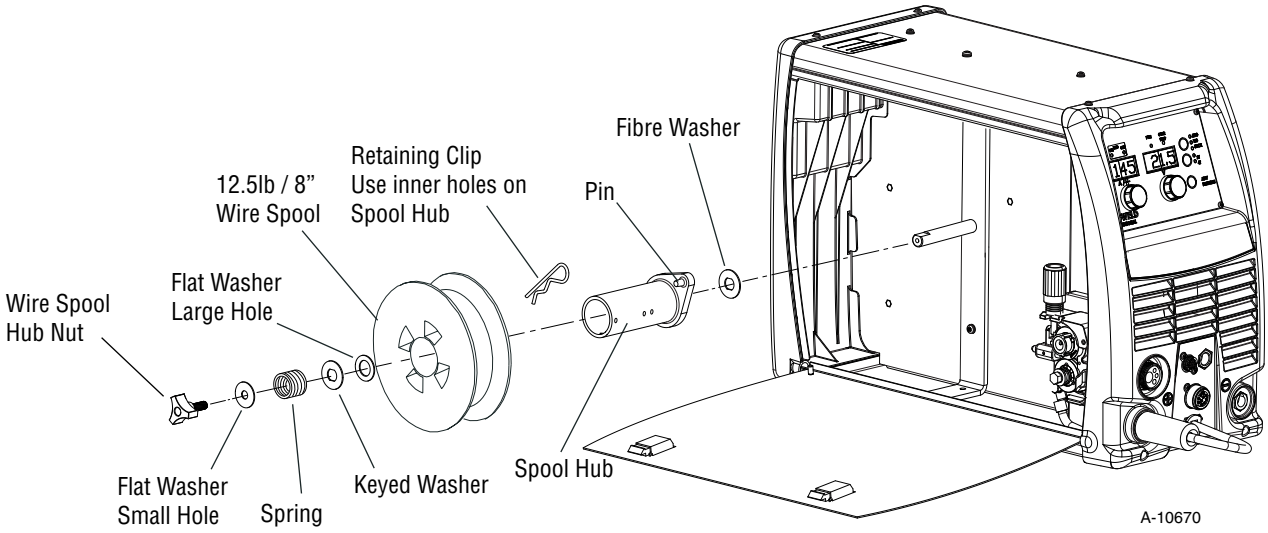

Figure 3-9: 12.5 lb 8" Spool Installation

3.10 Installing a Standard Spool (12" diameter)

As delivered from the factory, the unit is set for a 33 lb. or 12" spool.
Installation of wire spool. Refer to Figure 3-10.

1. Remove Wire Spool Hub Retaining Clip. Grasp the loop and pull.
2. Place Wire Spool onto the hub, loading it so that the wire will feed off the bottom of the spool as the spool rotates counter clockwise. Make sure to align the spool alignment pin on the hub with the mating hole in the wire spool.
3. Replace the Wire Spool Hub Retaining Clip in the set of holes closest to the spool.

NOTE!
The Hub tension has been pre-adjusted at the factory. However if adjustment is required, refer to section 3.16

CAUTION
Use care in handling the spooled wire as it will tend to “unravel” when loosened from the spool. Grasp the end of the wire firmly and don’t let go of it.

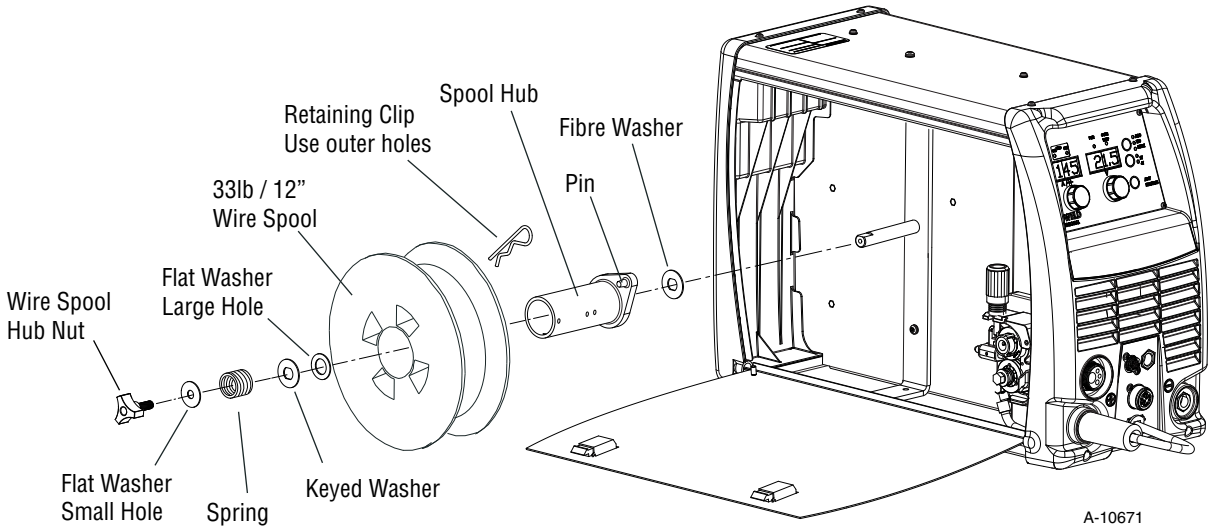

Figure 3-10: Standard 33 lb 12" Spool Installation

3.11 Inserting Wire into the Feed Mechanism

WARNING
ELECTRIC SHOCK CAN KILL! Make certain the input power is disconnected from the power source before proceeding. DO NOT reattach the input power until told to do so in these instructions.

1. Loosen the Spring Pressure Adjusting Knob if needed and swing it down (First part of Figure 3-11)
2. Move the Pressure (top) Roller Arm by swinging it to the right. (Second part of Figure 3-11)
3. Make sure the end of the wire is free of any burrs and is straight. Pass the end of wire through the Inlet Wire Guide and over the Feedroll. Make certain the proper groove is being used. (Second part of Figure 3-11)
4. Pass the MIG wire over the drive roll groove, through the outlet guide and out past the MIG Gun Adaptor. Then fit the Fusion 250A MIG Gun as per Section 3.08 ensuring the MIG wire passes into the MIG Gun liner of the MIG Gun.)
5. Close the Pressure Roller Arm. (Figure 3-12)
6. Swing the Spring Pressure Adjusting Knob back into place. (Figure 3-12)
7. Use the Spring Pressure Adjusting Knob to create a “snug” condition. (Clockwise to Tighten and Counter Clockwise to loosen). (Figure 3-12)
8. Figure 3-13 shows the result with wire installed. Continue to the next section for proper setting of tension.

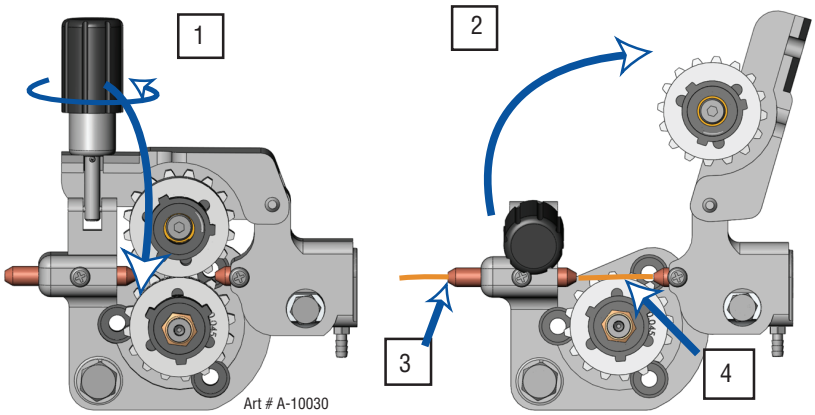

Figure 3-11: Opening Pressure Arm and Inserting Wire

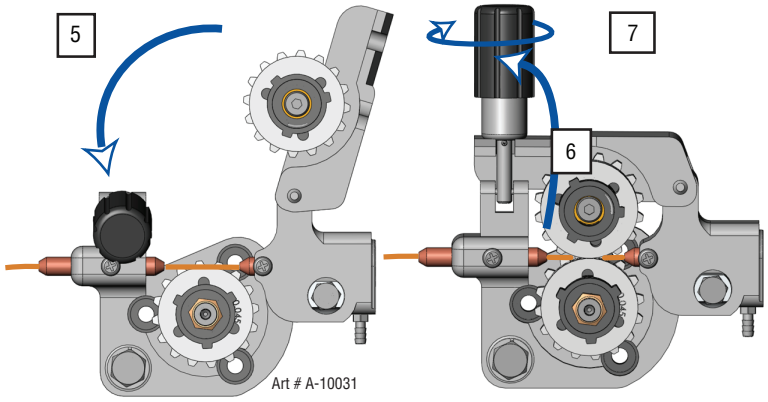

Figure 3-12: Closing Pressure Arm and Adjusting Tension

3.12 Feed Roller Pressure Adjustment

NOTE!
Before attempting to set the drive roller pressure you must select GMAW mode on the front panel. See earlier in section 3 for information on how to select this feature. Once selected it will allow the activation of the drive roll when the trigger on the MIG Gun is activated.

The roller on the swing arm applies pressure to the grooved roller via an adjustable tension devise. The Tension Adjuster should be set to a minimum pressure that will provide satisfactory wire feed without slippage. If slipping occurs, and inspection of the wire out of the MIG Gun reveals no deformation or wear, the conduit liner should be checked for kinks or clogging from metal flakes. If this is not the cause of slipping, the feedroll pressure can be increased by rotating the Tension Adjusting knob clockwise. The use of excessive pressure may cause rapid wear of the feed roller, motor shaft and motor bearings.

NOTE!
Genuine ESAB Velocity contact tips and liners should be used. Many non-genuine liners use inferior materials which can cause wire feed problems.

3.13 Feed Roller Alignment

The bottom Feed Roll is adjustable in and out to provide for best alignment of wire as it feeds into the outlet guide. To adjust the roll do the following and refer to Figure 3-13. Note, the welding wire is not shown in order to more clearly see the groove in the feed roll.

1. Place a wrench on the adjusting bolt (number 2) and hold in place while you loosen the locking screw (number 1) with a hex wrench
2. With the locking screw loosened, turn the adjusting bolt right or left to align the feed roll (number 3) so the groove is aligned with the outlet guide (number 4).
3. With the feed roll aligned, place a wrench on the adjusting bolt and hold it in place while tightening the locking screw with the hex wrench. If the adjusting bolt moves before the locking screw is secured then the alignment will change.

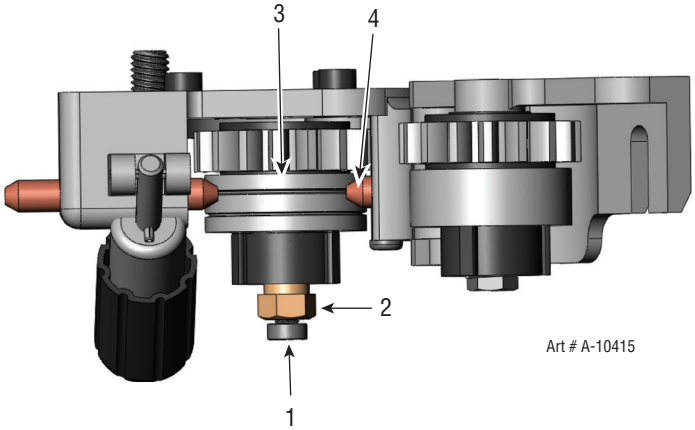

Figure 3-13: Top View of Feed Plate with Pressure Arm Open

NOTE!
It may not be possible to align with both the inlet and outlet guide at the same time. The outlet guide is the one that needs to be aligned to for best wire feeding.

3.14 Changing the Feed Roll

NOTE!
Feedrolls often come with a rust prohibitive coating that needs to be cleaned off before installation.

A Feedroll consists of two different sized grooves. As delivered from the factory the drive roll is installed for .035" / .045" (0.9 / 1.2 mm).

The stamped marking on the feedroll refers to the groove furthest from the stamped marking. When mounted, that will be the groove closest to the motor and the one to thread.

To ensure proper wire feed, the groove closest to the motor must match the electrode wire size being used.

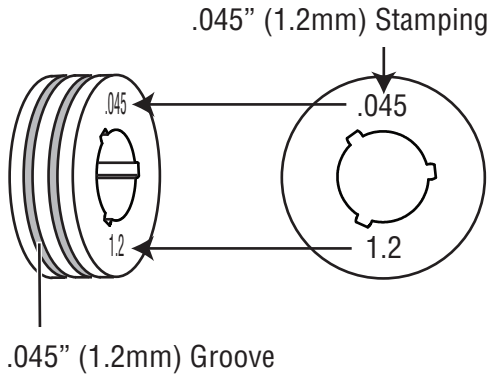

Art: A-07150_AB

The size that is visible when fitting the feedroll is the groove size in use.

Figure 3-14: Feedroll Example

NOTE!
All grooved feed rolls have their wire size or range stamped on the side of the roll. On rolls with different size grooves, the outer (visible when installed) stamped wire size indicates the groove in use.

Refer to feed roll kit in the Appendix for the proper selection and ordering of feed roll kits. Kit includes drive rolls, an input wire guide and an output wire guide for a specific wire type and size.

Feed rolls are removed by twisting the feed roll retainer cap and aligning the retaining knob splines/tabs with the drive gear splines. Feedrolls are installed by putting the feedroll onto the drive gear splines and twisting the feedroll retainer cap so that the splines/tabs rest against the face of the feedroll where they will click into place.

NOTE!
Installation of all styles of feed rolls for the Fabricator 252i are identical..

WARNING
The welding wire is electrically Hot if it is fed by depressing Fusion 250A MIG Gun switch. Electrode contact to work piece will cause an arc with MIG Gun switch depressed..

3.15 Input And Output Wire Guide Installation

NOTE!
.035" / .045" (0.9 / 1.2 mm) feed rolls and guides are installed from the factory. Other sizes need to be purchased separately..

Input Wire Guide - Install (the shorter one) by loosening the Input Guide Lock Screw and inserting the guide into the hole in the feed-head assembly. Adjust the guide so that it is clear of the feed rolls and Tighten the Input Guide Lock Screw.

NOTE!
Before tightening the Input and Output Guide Lock Screws, install the drive roll to help in the alignment of the wire guides.

Output Wire Guide - With the Fusion 250A MIG Gun removed, loosen the MIG Adapter Lock Nut. This will aid with alignment. Then loosen Output Guide Lock Screw. Install the Output Wire Guide (the longer one) by inserting the conical end part way into the ESAB Adapter from the front of the machine. Now install the MIG Gun pressing the output guide further in until the tip of the guide is as close to the feed rolls as practical. Secure the MIG Gun. Tighten the MIG Adapter Lock Nut, then tighten the Output Guide Lock Screw.

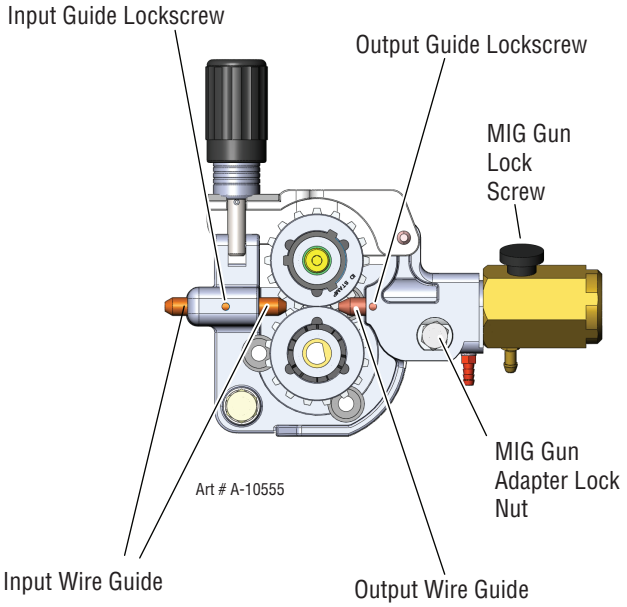

Figure 3-15: Wire Guide Installation

3.16 Wire Reel Brake

The wire reel hub incorporates a friction brake which is adjusted during manufacture for optimum braking. If it is considered necessary, adjustment can be made by turning the tri-lobe nut inside the open end of the wire reel hub. Clockwise rotation will Tighten the brake. (Refer to Figure 3-16).

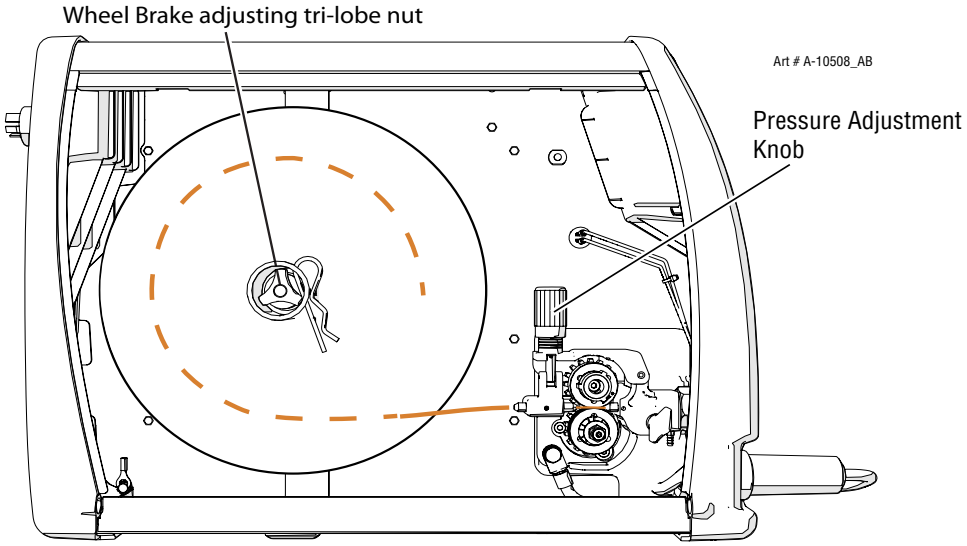

Figure 3-16: Wire Installed

CAUTION
Excessive tension on the brake will cause rapid wear of mechanical wire feed parts, over heating of electrical componentry and possibly an increased incidence of wire Burnback into the contact tip.

NOTE!
Correct adjustment will result in the wire reel circumference continuing no further than 3/4" (19 mm) after release of the MIG Gun trigger switch. The wire should be slack without becoming dislodged from the reel..

3.17 Shielding Gas Regulator Operating Instructions

WARNING
This equipment is designed for use with welding grade (Inert) shielding gases only.

NOTE!
Shielding Gas is not required if the unit is used with self shielded FCAW (flux cored arc welding) wires

Shielding Gas Regulator Safety

This regulator is designed to reduce and control high pressure gas from a cylinder or pipeline to the working pressure required for the equipment using it.
If the equipment is improperly used, hazardous conditions are created that may cause accidents. It is the users responsibility to prevent such conditions. Before handing or using the equipment, understand and comply at all times with the safe practices prescribed in this instruction.

SPECIFIC PROCEDURES for the use of regulators are listed below.

1. NEVER subject the regulator to inlet pressure greater than its rated inlet pressure.
2. NEVER pressurize a regulator that has loose or damaged parts or is in a questionable condition. NEVER loosen a connection or attempt to remove any part of a regulator until the gas pressure has been relieved. Under pressure, gas can dangerously propel a loose part.
3. Do NOT remove the regulator from a cylinder without first closing the cylinder valve and releasing gas in the regulator high and low pressure chambers.

4. Do NOT use the regulator as a control valve. When downstream equipment is not in use for extended periods of time, shut OFF the gas at the cylinder valve and release the gas from the equipment.
5. OPEN the cylinder valve SLOWLY. Close after use.

User Responsibilities

This equipment will perform safely and reliable only when installed, operated and maintained, and repaired in accordance with the instructions provided. Equipment must be checked periodically and repaired, replaced, or reset as necessary for continued safe and reliable performance. Defective equipment should not be used. Parts that are broken, missing, obviously worn, distorted, or contaminated should be replaced immediately.
The user of this equipment will generally have the sole responsibility for any malfunction, which results from improper use, faulty maintenance, or by repair by anyone other than an accredited repairer.

CAUTION
Match regulator to cylinder. NEVER CONNECT a regulator designed for a particular gas or gases to a cylinder containing any other gas.

Figure 3-17: Adjusting Flow Rate

NOTE!
The regulator/flow meters used with argon based and carbon dioxide shielding gases are different. The regulator/flow meter supplied is for argon based shielding gases. If carbon dioxide is to be used a suitable carbon dioxide regulator/flow meter will need to be fitted.

NOTE!
All valves downstream of the regulator must be opened to obtain a true flow rate reading on the outlet gauge. (Welding power source must be triggered) Close the valves after the pressure has been set.

Installation

1. Remove cylinder valve plastic dust seal. Clean the cylinder valve outlet of impurities that may clog orifices and damage seats before connecting the regulator.
   Crack the valve (open then close) momentarily, pointing the outlet away from people and sources of ignition. Wipe with a clean lint free cloth.
2. Match regulator to cylinder. Before connecting, check that the regulator label and cylinder marking agree and that the regulator inlet and cylinder outlet match. NEVER CONNECT a regulator designed for a particular gas or gases to a cylinder containing any other gas.
3. Connect the regulator inlet connection to cylinder or pipeline and Tighten it firmly but not excessively, with a suitable spanner.
4. Attach supplied gas line between the regulator output and the desired input at the rear of the power source. MIG Spool Gun and LIFT TIG in the bottom fitting and regular Fusion MIG Gun in the top fitting.

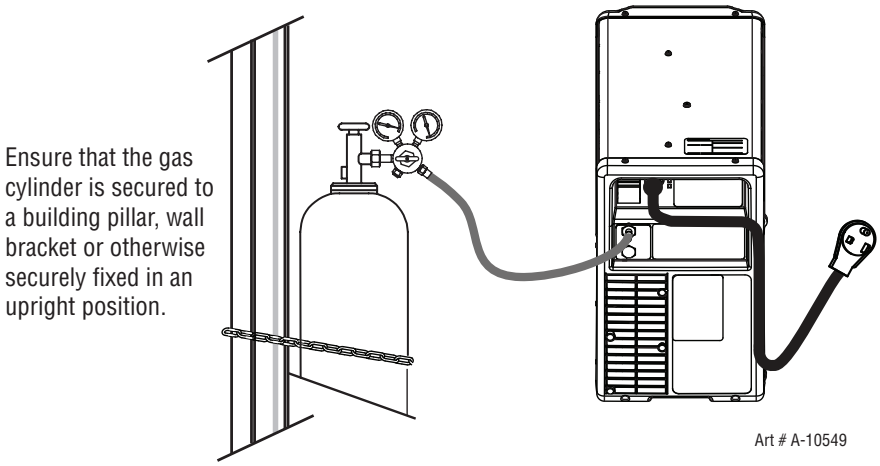

Figure 3-18: Attach gas line to proper inlet

5. To protect sensitive down-stream equipment a separate safety device may be necessary if the regulator is not fitted with a pressure relief device.

Operation

With the regulator connected to cylinder or pipeline, and the adjustment screw/knob fully disengaged, pressurize as follows:

1. Stand to one side of regulator and slowly open the cylinder valve. If opened quickly, a sudden pressure surge may damage internal regulator parts.
2. With valves on downstream equipment closed, adjust regulator to approximate working pressure. It is recommended that testing for leaks at the regulator connection points be carried out using a suitable leak detection solution or soapy water.
3. Purge air or other unwanted welding grade shielding gas from equipment connected to the regulator by individually opening then closing the equipment control valves. Complete purging may take up to ten seconds or more, depending upon the length and size of the hose being purged.

Adjusting Flow Rate

Figure 3-19: Adjust Flow Rate

With the regulator ready for operation, adjust working flow rate as follows:

1. Slowly turn adjusting screw/knob in (clockwise) direction until the outlet gauge indicates the required flow rate.

NOTE!
It may be necessary to re-check the shielding gas regulator flow rate following the first weld sequence due to back pressure present within shielding gas hose assembly.

2. To reduce flow rate, allow the welding grade shielding gas to discharge from regulator by opening the downstream valve. Bleed welding grade shielding gas into a well ventilated area and away from any ignition source. Turn adjusting screw counterclockwise, until the required flow rate is indicated on the gauge. Close downstream valve.
3. Adjust regulator pressure adjusting screw to the required flow rate, indicated on gauge dial. (Refer to Figure 3-19)

The gas flow rate should be adequate to cover the weld zone to stop weld porosity. Excessive gas flow rates may cause turbulence and weld porosity.

Argon or argon based gas flow rates:
- Workshop welding: 28 - 35 CFH
- Outdoor welding: 35 - 46 CFH

Shutdown

Close cylinder valve whenever the regulator is not in use. To shut down for extended periods (more than 30 minutes).

1. Close cylinder or upstream valve LIFT Tightly.
2. Open downstream equipment valves to drain the lines. Bleed gas into a well ventilated area and away from any ignition source.
3. After gas is drained completely, disengage adjusting screw and close downstream equipment valves.
4. Before transporting cylinders that are not secured on a cart designed for such purposes, remove regulators.

3.18 Set-up MIG (GMAW) Welding with Gas Shielded MIG Wire

The Fabricator 252i is supplied with a ESAB Fusion 250 AMP air-cooled MIG Gun. The ESAB Fusion 250A MIG Gun is designed with an ergonomic handle and fewer parts to cause performance problems. The Fusion MIG Gun uses standard readily available ESAB Velocity consumable parts.

When using a non shielded wire, you need to have an external gas source attached to the unit.

For most Non Shielded Wire, connect the Work Lead to the negative - terminal and connect the MIG Gun polarity lead to the positive + terminal. If in doubt, consult the MIG electrode wire manufacturer.

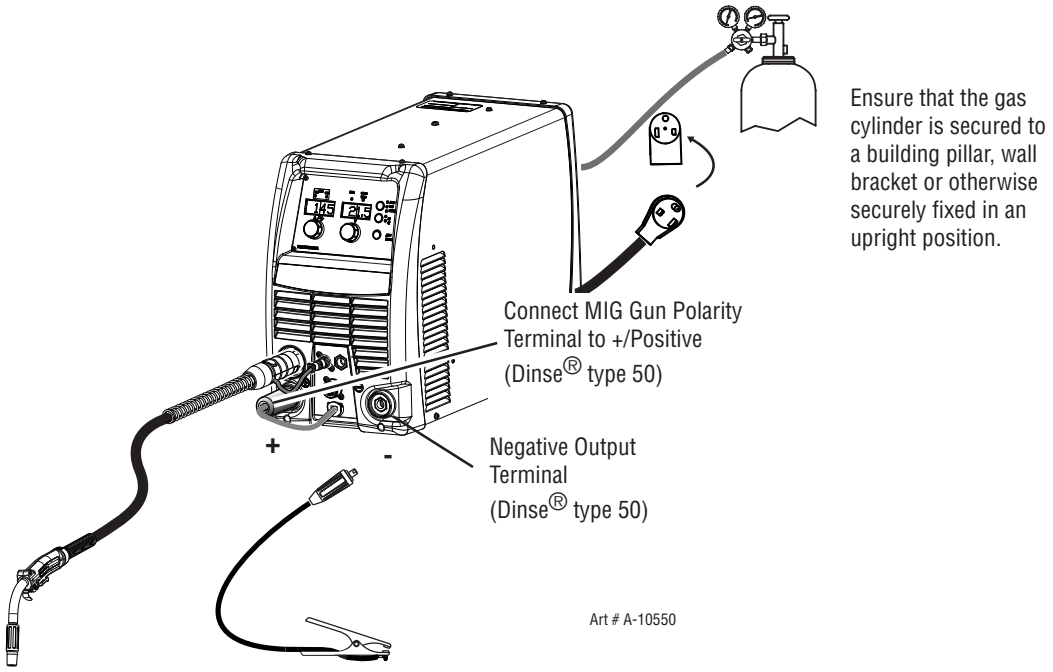

Figure 3-20: MIG Gun Polarity Positive

1. Turn the Main ON/OFF switch OFF (located on the rear panel).
2. Check that the MIG wire size, contact tip, MIG Gun liner and drive roll groove are all the same size before fitting the MIG wire into the Power Source.
3. Connect the MIG Gun Polarity Lead to the positive welding terminal (+). If in doubt, consult the MIG electrode wire manufacturer. Welding current flows from the Power Source via heavy duty bayonet type terminals. It is essential, however, that the male plug is inserted and turned securely to achieve a sound electrical connection.
4. Fit the MIG wire spool and Fusion MIG Gun to the Power Source. (Refer to section 3.08 to 3.12).

5. Connect the work lead to the negative welding terminal (-). If in doubt, consult the MIG electrode wire manufacturer. Welding current flows from the Power Source via heavy duty bayonet type terminals. It is essential, however, that the male plug is inserted and turned securely to achieve a sound electrical connection.
6. Fit the welding grade shielding gas regulator/flow gauge to the shielding gas cylinder (refer to Section 3.17) then connect the shielding gas hose from the rear of the power source to the regulator/flow gauge outlet.
7. Turn the Main ON/OFF switch ON (located on the rear panel).
8. Select MIG mode with the process selection control. (Refer to Section 3.06.3 for further information)
9. Remove the Fusion MIG Gun nozzle and contact tip.
10. Depress MIG Gun trigger to feed the MIG wire out. Then fit the contact tip on the MIG wire and hand tighten the nozzle in place.
11. Refer to the Weld Guide located on the inside of the wire feed compartment door for further information on Voltage/Wirespeed settings.

WARNING
Before connecting the work clamp to the work make sure the mains power supply is switched OFF.
Secure the welding grade shielding gas cylinder in an upright position by chaining it to a suitable stationary support to prevent falling or tipping

CAUTION
Loose welding terminal connections can cause overheating and result in the male plug being fused in the terminal.
Remove any packaging material prior to use. DO NOT block the air vents at the front or rear of the Welding Power Source.

NOTE!
Depending on the type of wire you will be using the MIG Gun polarity may need to be switched. Follow the wire manufacturers recommendation.

3.19 Set-up for MIG (FCAW) Welding with Gasless MIG Wire

The Fabricator 252i is supplied with a ESAB Fusion 250 AMP air-cooled MIG Gun. The ESAB Fusion 250A MIG Gun is designed with an ergonomic handle and fewer parts to cause performance problems. The Fusion MIG Gun uses standard readily available ESAB Velocity consumable parts.

When using a gasless flux cored wire, you do not need to have an external gas source attached to the unit. For most Self Shielded Flux Cored Wire, connect the Work Lead to the positive + terminal and connect the MIG Torch polarity lead to the negative - terminal. If in doubt, consult the Flux Cored electrode wire manufacturer.

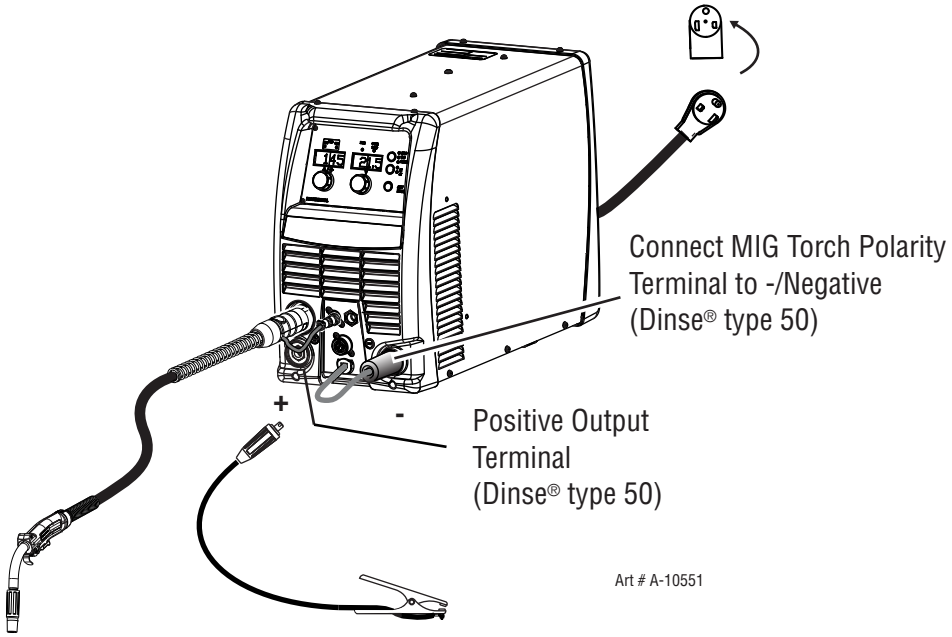

Figure 3-21: MIG Gun Polarity Negative

1. Turn the Main ON/OFF switch OFF (located on the rear panel).
2. Check that the MIG wire size, contact tip, MIG Gun liner and drive roll groove are all the same size before fitting the MIG wire into the Power Source.
3. Connect the MIG Gun Polarity Lead to the negative welding terminal (-). If in doubt, consult the MIG electrode wire manufacturer. Welding current flows from the Power Source via heavy duty bayonet type terminals. It is essential, however, that the male plug is inserted and turned securely to achieve a sound electrical connection.
4. Fit the MIG (FCAW) wire spool and MIG Gun to the Power Source. (Refer to section 3.08 to 3.12).
5. Connect the work lead to the positive welding terminal (+). If in doubt, consult the MIG electrode wire manufacturer. Welding current flows from the Power Source via heavy duty bayonet type terminals. It is essential, however, that the male plug is inserted and turned securely to achieve a sound electrical connection.
6. If gasless MIG (FCAW) wire is fitted then shielding gas is not required for welding. Otherwise fit the welding grade shielding gas regulator/flow gauge to the shielding gas cylinder (refer to Section 3.17) then connect the shielding gas hose from the rear of the power source to the regulator/flow gauge outlet.
7. Turn the Main ON/OFF switch ON (located on the rear panel).
8. Select MIG mode with the process selection control. (Refer to Section 3.06.4 for further information)
9. Remove the MIG Gun nozzle and contact tip.
10. Depress MIG Gun trigger to feed the MIG wire out. Then fit the contact tip on the MIG wire and hand tighten the nozzle in place.
11. Refer to the Weld Guide located on the inside of the wire feed compartment door for further information on Voltage/Wirespeed settings.

WARNING
Before connecting the work clamp to the work make sure the mains power supply is switched OFF.

CAUTION
Loose welding terminal connections can cause overheating and result in the male plug being fused in the terminal.
Remove any packaging material prior to use. DO NOT block the air vents at the front or rear of the Welding Power Source.

NOTE!
Depending on the type of wire you will be using the MIG Gun polarity may need to be switched. Follow the wire manufacturers recommendation.

3.20 Set-up for LIFT TIG (GTAW) Welding

WARNING
Before any welding is to begin, be sure to wear all appropriate and recommended safety equipment.

NOTE!
The following steps will assume that you have already set up the proper shielding gas as outlined in Sub Section 3.17.

NOTE!
The following set up is known as Straight Polarity or DC Electrode Negative. This is commonly used for DC LIFT TIG welding on most materials such as steel and stainless steel..

1. Switch the ON/OFF Switch (located on the rear panel) to OFF.
2. Connect the work lead cable to the positive output terminal, and the LIFT TIG Torch cable to the negative output terminal. Refer to Figure 3-23.
3. Connect the gas line/hose to the proper shielding gas source. Refer to Figure 3-23.
4. Slowly open the Argon Cylinder Valve to the fully open position.
5. Connect the work lead clamp to your work piece.
6. The tungsten must be ground to a blunt point (similar to a pencil) in order to achieve optimum welding results. See illustration. It is critical to grind the tungsten electrode in the direction the grinding wheel is turning. Grind at a 30 degree angle and never to a sharp point.

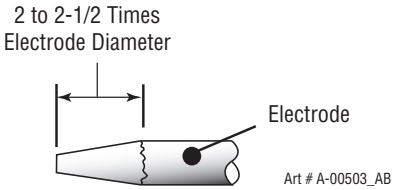

Figure 3-22: Electrode sharpening

7. Install the tungsten with approximately 1/8" to 1/4"(3.2mm to 6.4mm) sticking out from the gas cup, ensuring you have correct sized collet.
8. Tighten the back cap.
9. Turn the switch to the “ON” position. The power L.E.D. light should illuminate.
10. Set the welding process to LIFT TIG.
11. Set the Weld Current Control Knob to the desired amperage.

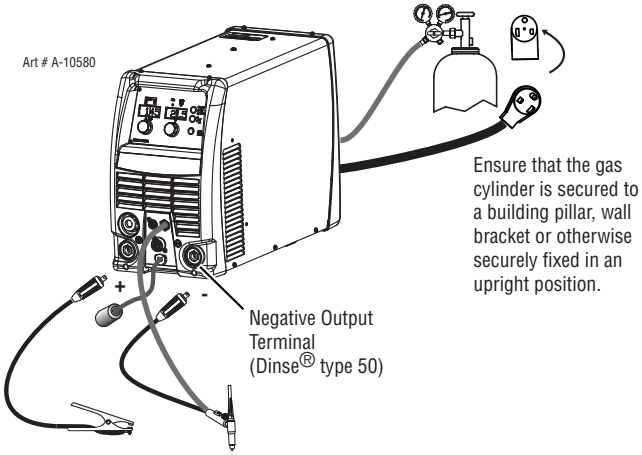

Figure 3-23: Setup for LIFT TIG (GTAW) Welding

12. You are now ready to begin LIFT TIG Welding.

3.21 Set-up for STICK Metal Arc Welding (SMAW)

WARNING
Before any welding is to begin, be sure to wear all appropriate and recommended safety equipment.

NOTE!
The following set up is known as DC Electrode Positive or reverse polarity. Please consult with the STICK electrode manufacturer for specific polarity recommendations.

1. Switch the ON/OFF Switch (located on the rear panel) to OFF.
2. Attach the STICK and Work Leads as shown in Figure 3-24.

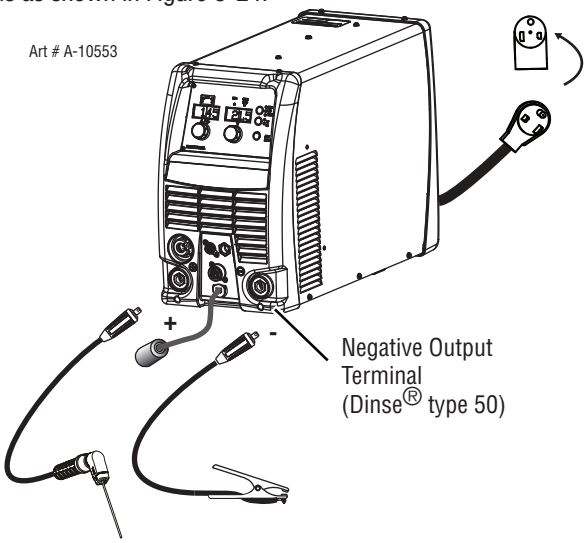

Figure 3-24: Setup for STICK Welding reverse polarity shown.

3. Set the welding process to STICK.
4. Set the Weld Current Control Knob to the desired amperage.
5. Install a STICK electrode in the electrode holder.
6. You are now ready to begin STICK Welding.

NOTE!
To weld, gently strike the electrode on the work piece to generate a welding arc, and slowly move along the work piece while holding a consistent arc length above base metal.

SECTION 4: BASIC WELDING GUIDE

4.01 MIG (GMAW/FCAW) Basic Welding Technique

Two different welding processes are covered in this section (GMAW and FCAW), with the intention of providing the very basic concepts in using the MIG mode of welding, where a MIG Gun is hand held, and the electrode (welding wire) is fed into a weld puddle, and the arc is shielded by an inert welding grade shielding gas or inert welding grade shielding gas mixture.

GAS METAL ARC WELDING (GMAW): This process, also known as MIG welding, CO_2 welding, Micro Wire Welding, short arc welding, dip transfer welding, wire welding etc., is an electric arc welding process which fuses together the parts to be welded by heating them with an arc between a solid continuous, consumable electrode and the work. Shielding is obtained from an externally supplied welding grade shielding gas or welding grade shielding gas mixture. The process is normally applied semi automatically; however the process may be operated automatically and can be machine operated. The process can be used to weld thin and fairly thick steels, and some non-ferrous metals in all positions.

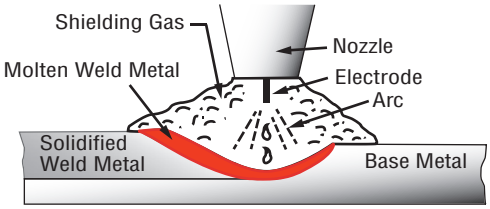

GMAW Process Art # A-8991_AB

Figure 4-1

FLUX CORED ARC WELDING (FCAW): This is an electric arc welding process which fuses together the parts to be welded by heating them with an arc between a continuous flux filled electrode wire and the work. Shielding is obtained through decomposition of the flux within the tubular wire. Additional shielding may or may not be obtained from an externally supplied gas or gas mixture. The process is normally applied semi automatically; however the process may be applied automatically or by machine. It is commonly used to weld large diameter electrodes in the flat and horizontal position and small electrode diameters in all positions. The process is used to a lesser degree for welding stainless steel and for overlay work.

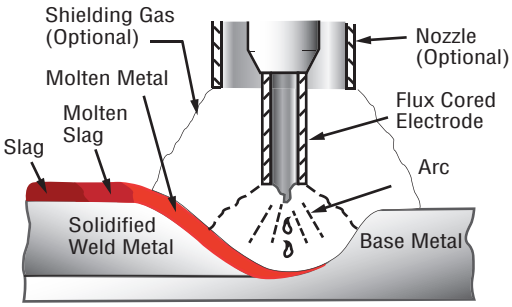

FCAW Process Art # A-08992_AB

Figure 4-2

Position of MIG Gun

The angle of MIG Gun to the weld has an effect on the width of the weld.

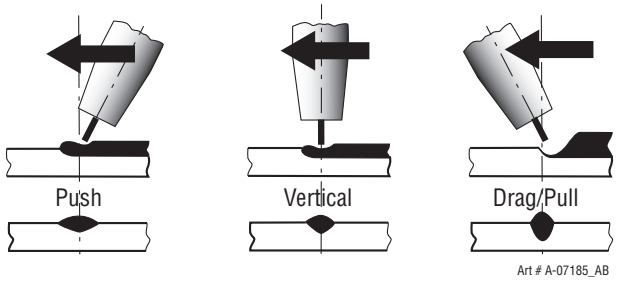

Figure 4-3

The MIG Gun should be held at an angle to the weld joint. (See Secondary Adjustment Variables below)

Hold the MIG Gun so that the welding seam is viewed at all times. Always wear the welding helmet with proper filter lenses and use the proper safety equipment.

> **CAUTION**
> Do NOT pull the MIG Gun back when the arc is established. This will create excessive wire extension (stick-out) and make a very poor weld.

The electrode wire is not energized until the MIG Gun trigger switch is depressed. The wire may therefore be placed on the seam or joint prior to lowering the helmet.

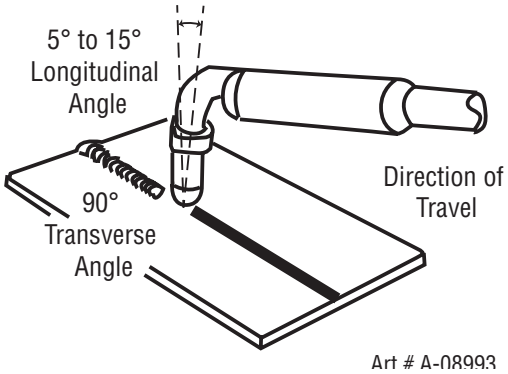

Figure 4-4

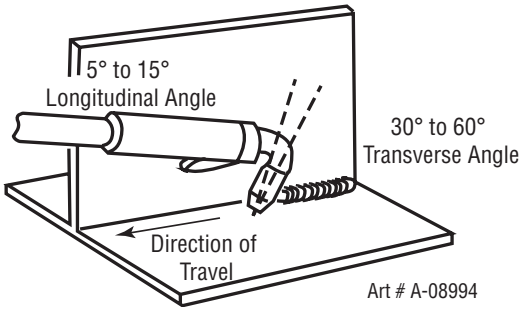

Figure 4-5

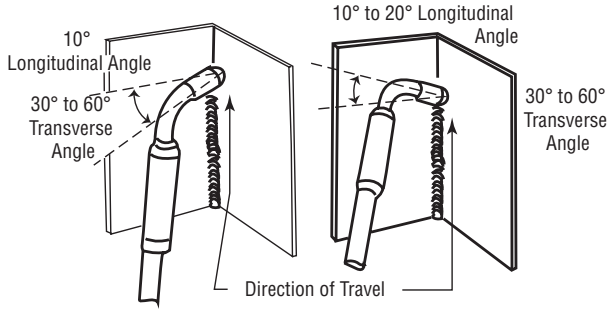

Vertical Fillet Welds Art # A-08995

Figure 4-6

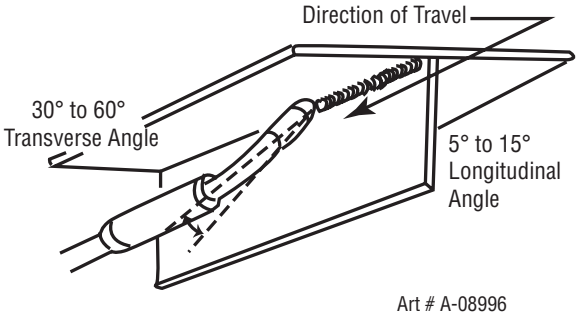

Overhead Weld

Figure 4-7

Distance from the MIG Gun Nozzle to the Work Piece

The electrode wire stick out from the MIG Gun nozzle should be between 3/8" - 3/4" (10 - 20 mm). This distance may vary depending on the type of joint that is being welded.

Travel Speed

The speed at which the molten pool travels influences the width of the weld and penetration of the welding run.

MIG Welding (GMAW) Variables

Most of the welding done by all processes is on carbon steel. The items below describe the welding variables in short-arc welding of .023 - 1/4" (0.6 mm - 6.4 mm) mild sheet or plate. The applied techniques and end results in the GMAW process are controlled by these variables.

Preselected Variables

Preselected variables depend upon the type of material being welded, the thickness of the material, the welding position, the deposition rate and the mechanical properties. These variables are:

- Type of electrode wire
- Size of electrode wire
- Type of gas (not applicable for FCAW self shielding wires)
- Gas flow rate (not applicable for FCAW self shielding wires)

Primary Adjustable Variables

These control the process after preselected variables have been found. They control the penetration, bead width, bead height, arc stability, deposition rate and weld soundness. They are:

- Arc Voltage
- Welding current (wire feed speed)
- Travel speed

Secondary Adjustable Variables

These variables cause changes in primary adjustable variables which in turn cause the desired change in the bead formation. They are:

1. Sick-out (distance between the end of the contact tube (tip) and the end of the electrode wire). Maintain at about 3/8" (10 mm) stick-out
2. Wire Feed Speed. Increase in wire feed speed increases weld current, Decrease in wire feed speed decreases weld current.

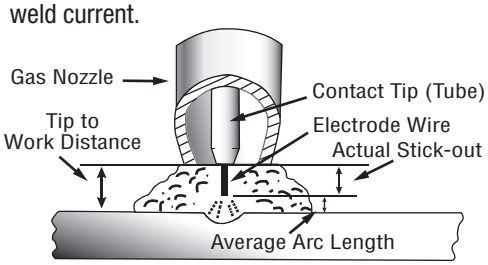

Electrode Stick-Out

Figure 4-8

3. Nozzle Angle. This refers to the position of the MIG Gun in relation to the joint. The transverse angle is usually one half the included angle between plates forming the joint. The longitudinal angle is the angle between the centre line of the MIG Gun and a line perpendicular to the axis of the weld. The longitudinal angle is generally called the Nozzle Angle and can be either trailing (pulling) or leading (pushing). Whether the operator is left handed or right handed has to be considered to realize the effects of each angle in relation to the direction of travel.

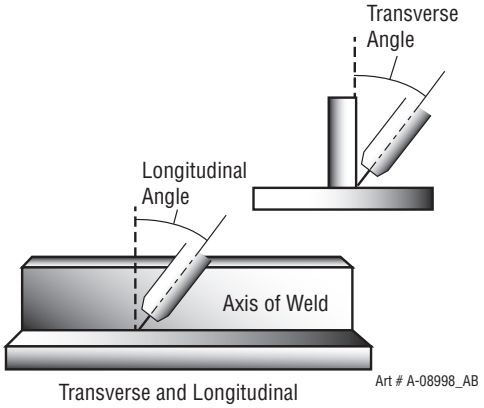

Transverse and Longitudinal Nozzle Axes

Figure 4-9

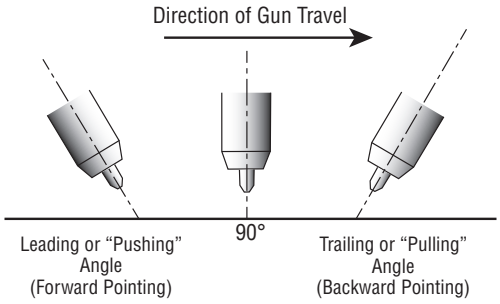

Nozzle Angle, Right Handed Operator Art # A-08999_AC

Figure 4-10

Establishing the Arc and Making Weld Beads

Before attempting to weld on a finished piece of work, it is recommended that practice welds be made on a sample metal of the same material as that of the finished piece.
The easiest welding procedure for the beginner to experiment with MIG welding is the flat position. The equipment is capable of flat, vertical and overhead positions.
For practicing MIG welding, secure some pieces of 1/16" or 3/16" (1.6 mm or 5.0 mm) mild steel plate 6" x 6" (150 mm x 150 mm). Use .035" (0.9 mm) flux cored gasless wire or a solid wire with shielding gas.

Setting of the Power Source

Power source and Wirefeeder setting requires some practice by the operator, as the welding plant has two control settings that have to balance. These are the Wirespeed control (refer to section 3.06.4) and the welding Voltage Control (refer to section 3.06.10). The welding current is determined by the Wirespeed control, the current will increase with increased Wirespeed, resulting in a shorter arc. Less wire speed will reduce the current and lengthen the arc. Increasing the welding voltage hardly alters the current level, but lengthens the arc. By decreasing the voltage, a shorter arc is obtained with a little change in current level.

When changing to a different electrode wire diameter, different control settings are required. A thinner electrode wire needs more Wirespeed to achieve the same current level.

A satisfactory weld cannot be obtained if the Wirespeed and Voltage settings are not adjusted to suit the electrode wire diameter and the dimensions of the work piece.

If the Wirespeed is too high for the welding voltage, "stubbing" will occur as the wire dips into the molten pool and does not melt. Welding in these conditions normally produces a poor weld due to lack of fusion. If, however, the welding voltage is too high, large drops will form on the end of the wire, causing spatter. The correct setting of voltage and Wirespeed can be seen in the shape of the weld deposit and heard by a smooth regular arc sound. Refer to the Weld Guide located on the inside of the wirefeed compartment door for setup information.

Electrode Wire Size Selection

The choice of Electrode wire size and shielding gas used depends on the following:

- Thickness of the metal to be welded
- Type of joint
- Capacity of the wire feed unit and Power Source
- The amount of penetration required
- The deposition rate required
- The bead profile desired
- The position of welding
- Cost of the wire

ESAB MIG, Lift TIG, Stick Wire Selection Chart

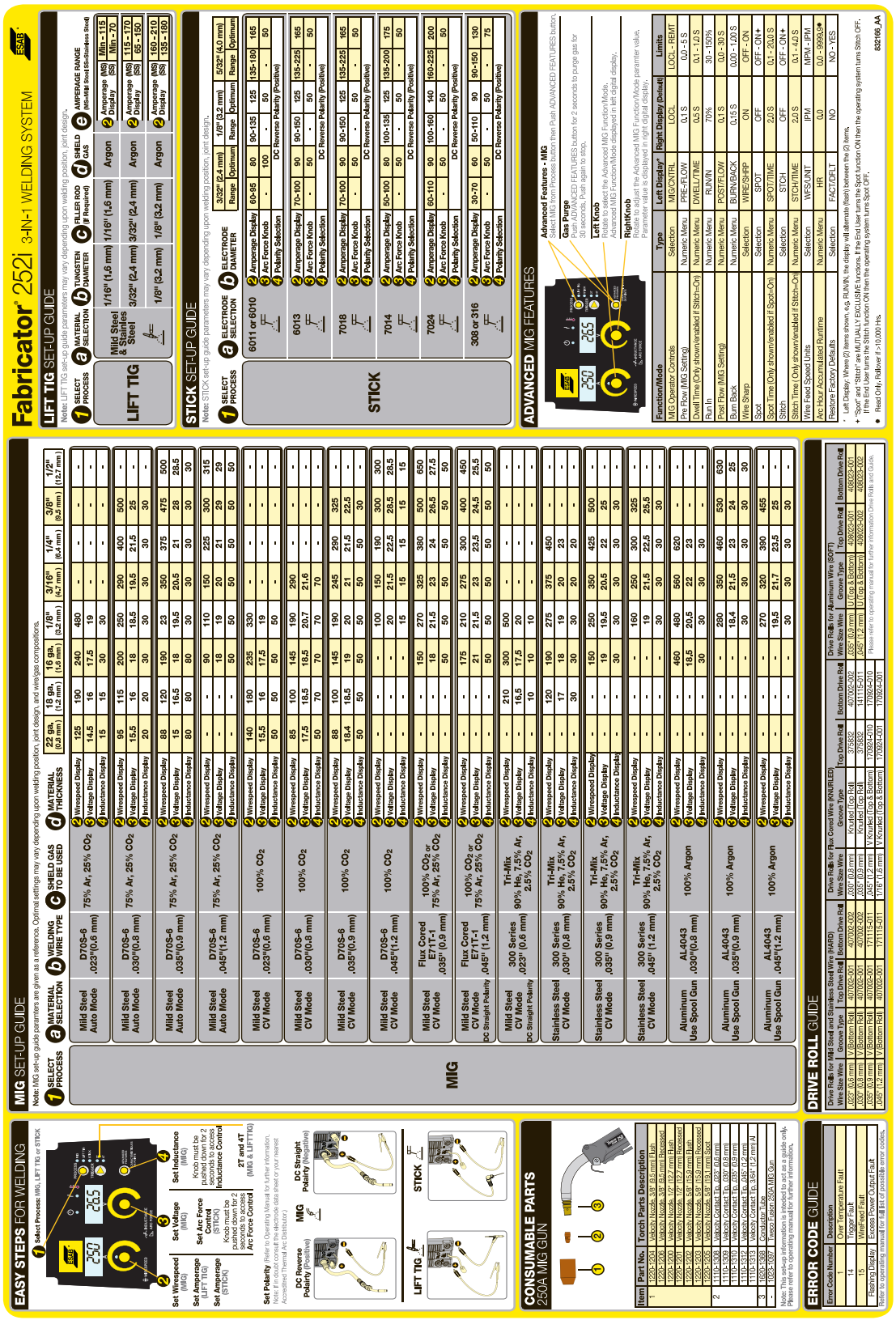

Figure 4-11

4.02 MIG (GMAW/FCAW) Welding Troubleshooting

Solving Problems Beyond the Welding Terminals

The general approach to fix MIG (GMAW/FCAW) welding problems is to start at the wire spool then work through to the MIG Gun. There are two main areas where problems occur with GMAW; Porosity and Inconsistent wire feed.

Problem 1 - Porosity

When there is a gas problem the result is usually porosity within the weld metal. Porosity always stems from some contaminant within the molten weld pool which is in the process of escaping during solidification of the molten metal. Contaminants range from no gas around the welding arc to dirt on the work piece surface. Porosity can be reduced by checking the following points.

FAULT/CONDITION		CAUSE	
1	Shielding gas cylinder contents and flow meter.		Ensure that the shielding gas cylinder is not empty and the flow meter is correctly adjusted to 31.75 CFH.
2	Gas leaks.		Check for gas leaks between the regulator/cylinder connection and in the gas hose to the Power Source.
3	Internal gas hose in the Power Source.		Ensure the hose from the solenoid valve to the MIG Gun adaptor has not fractured and that it is connected to the MIG Gun adaptor.
4	Welding in a windy environment.		Shield the weld area from the wind or increase the gas flow.
5	Welding dirty, oily, painted, oxidized or greasy plate.		Clean contaminates off the work piece.
6	Distance between the MIG Gun nozzle and the work piece.		Keep the distance between the MIG Gun nozzle and the work piece to a minimum.
7	Maintain the MIG Gun in good working order.	A	Ensure that the gas holes are not blocked and gas is exiting out of the torch nozzle.
		B	Do NOT restrict gas flow by allowing spatter to build up inside the MIG Gun nozzle.
		C	Check that the MIG Gun O-rings are not damaged.

Table 4-1: MIG (GMAW / FCAW) Welding Troubleshooting

Problem 2 - Inconsistent Wire Feed

WARNING
Disengage the feed roll when testing for gas flow by ear.

Wire feeding problems can be reduced by checking the following points.

	FAULT		CAUSE
1	Feed roller driven by motor in the cabinet slipped.		Wire spool brake is too tight.
2	Wire spool unwound and tangled.		Wire spool brake is too loose.
3	Worn or incorrect feed roller size.	A	Use a feed roller matched to the size you are welding.
		B	Replace feed roller if worn.
4	Wire rubbed against the misaligned guides and reduced wire feed ability.		Misalignment of inlet/outlet guides
5	Liner blocked with swarf.	A	Increased amounts of swarf are produced by the wire passing through the feed roller when excessive pressure is applied to the pressure roller adjuster.
		B	Swarf can also be produced by the wire passing through an incorrect feed roller groove shape or size.
		C	Swarf is fed into the conduit liner where it accumulates thus reducing wire feed ability.
6	Incorrect or worn contact tip.	A	The Velocity contact tip transfers the weld current to the electrode wire. If the hole in the contact tip is too large then arcing may occur inside the contact tip resulting in the wire jamming in the contact tip.
		B	When using soft wire such as aluminum it may become jammed in the contact tip due to expansion of the wire when heated. A Velocity contact tip designed for soft wires should be used.
7	Poor work lead contact to work piece.		If the work lead has a poor electrical contact to the work piece then the connection point will heat up and result in a reduction of power at the arc.
8	Bent liner.		This will cause friction between the wire and the liner thus reducing wire feed ability

Table 4-2: Wire Feeding Problems

Basic MIG (GMAW/FCAW) Welding Troubleshooting

FAULT	CAUSE	REMEDY
1 Undercut	A Welding arc voltage too high.	A Decrease voltage or increase the wire feed speed.
	B Incorrect MIG Gun angle	B Adjust angle.
	C Excessive heat input	C Increase the MIG Gun travel speed and/or decrease welding current by decreasing the voltage or decreasing the wire feed speed.
2 Lack of penetration	A Welding current too low	A Increase welding current by increasing wire feed speed and increasing voltage.
	B Joint preparation too narrow or gap too tight	B Increase joint angle or gap.
	C Shielding gas incorrect	C Change to a gas which gives higher penetration.
3 Lack of fusion	Voltage too low	Increase voltage.
4 Excessive spatter	A Voltage too high	A Decrease voltage or increase the wirespeed control.
	B Voltage too low	B Increase the voltage or decrease wirespeed.
5 Irregular weld shape	A Incorrect voltage and current settings. Convex, voltage too low. Concave, voltage too high.	A Adjust voltage and current by adjusting the voltage control and the wirespeed control.
	B Wire is wandering.	B Replace Velocity contact tip.
	C Incorrect shielding gas	C Check shielding gas.
	D Insufficient or excessive heat input	D Adjust the wirespeed control or the voltage control.
6 Weld cracking	A Weld beads too small	A Decrease travel speed
	B Weld penetration narrow and deep	B Reduce current and voltage and increase MIG Gun travel speed or select a lower penetration shielding gas.
	C Excessive weld stresses	C Increase weld metal strength or revise design.
	D Excessive voltage	D Decrease voltage.
	E Cooling rate too fast	E Slow the cooling rate by preheating part to be welded or cool slowly.
7 Cold weld puddle	A Loose welding cable connection.	A Check all welding cable connections.
	B Low primary voltage	B Contact supply authority.
	C Fault in power source	C Have an Accredited ESAB Service Provider test then replace the faulty component.
8 Arc does not have a crisp sound that short arc exhibits when the wirefeed speed and voltage are adjusted correctly.	The MIG Gun has been connected to the wrong voltage polarity on the front panel.	Connect the MIG Gun to the positive (+) welding terminal for solid wires and gas shielded flux cored wires. Refer to the electrode wire manufacturer for the correct polarity.
9 Poor weld result from setup chart parameters	Contact tip has arc marks in the bore causing excessive drag on the wire.	Replace the contact tip with only a Genuine ESAB Velocity contact tip.

Table 4-3: MIG (GMAW /FCAW) Welding Problems

4.03 STICK (SMAW) Basic Welding Technique

Size of Electrode

The electrode size is determined by the thickness of metals being joined and can also be governed by the type of welding machine available. Small welding machines will only provide sufficient current (amperage) to run the smaller size electrodes.
For thin sections, it is necessary to use smaller electrodes otherwise the arc may burn holes through the job. A little practice will soon establish the most suitable electrode for a given application.

Storage of Electrodes

Always store electrodes in a dry place and in their original containers.

Electrode Polarity

Electrodes are generally connected to the ELECTRODE HOLDER with the Electrode Holder connected positive polarity. The WORK LEAD is connected negative polarity and is connected to the work piece. If in doubt consult the electrode data sheet or your nearest Accredited ESAB Distributor.

Effects of Arc Welding Various Materials

A. High tensile and alloy steels

The two most prominent effects of welding these steels are the formation of a hardened zone in the weld area, and, if suitable precautions are not taken, the occurrence in this zone of under-bead cracks may result. Hardened zone and under-bead cracks in the weld area may be reduced by using the correct electrodes, preheating, using higher current settings, using larger electrodes sizes, short runs for larger electrode deposits or tempering in a furnace.

Hydrogen controlled Electrodes must be used for this application.

B. Austenitic manganese steels

The effect on manganese steel of slow cooling from high temperatures is to embrittle it. For this reason it is absolutely essential to keep manganese steel cool during welding by quenching after each weld or skip welding to distribute the heat.

C. Cast Iron

Most types of cast iron, except white iron, are weldable. White iron, because of its extreme brittleness, generally cracks when attempts are made to weld it. Trouble may also be experienced when welding white-heart malleable, due to the porosity caused by gas held in this type of iron.

D. Copper and alloys

The most important factor is the high rate of heat conductivity of copper, making preheating of heavy sections necessary to give proper fusion of weld and base metal.

Arc Welding Practice

The techniques used for arc welding are almost identical regardless of what types of metals are being joined. Naturally enough, different types of electrodes would be used for different metals as described in the preceding section.

Welding Position

The electrodes dealt with in this publication can be used in most positions, i.e. they are suitable for welding in flat, horizontal, vertical and overhead positions. Numerous applications call for welds to be made in positions intermediate between these. Some of the common types of welds are shown in Figures 4-12 through 4-19.

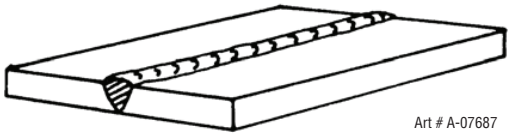

Figure 4-12: Flat Position, Down Hand Butt Weld

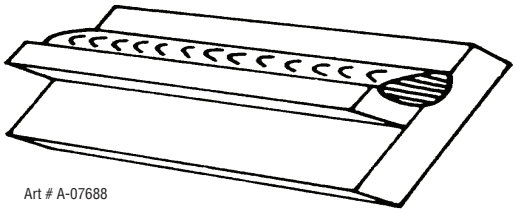

Figure 4-13: Flat Position, Gravity Fillet Weld

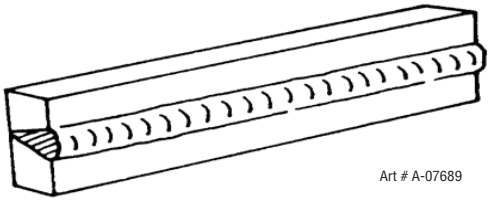

Figure 4-14: Horizontal Position, Butt Weld

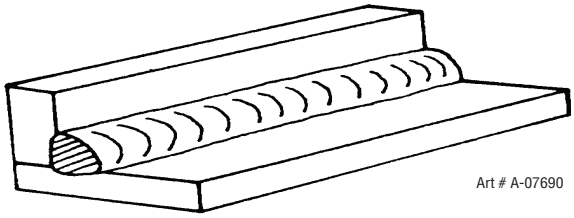

Figure 4-15: Horizontal-Vertical (HV) Position

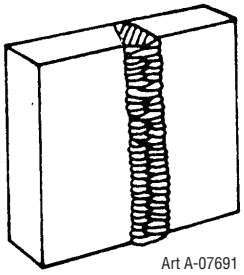

Figure 4-16: Vertical Position, Butt Weld

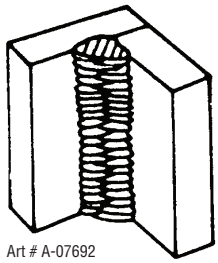

Figure 4-17: Vertical Position, Fillet Weld

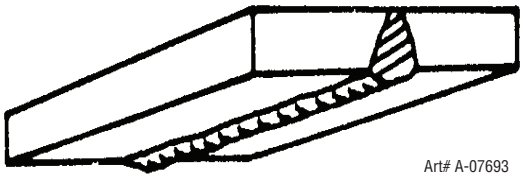

Figure 4-18: Overhead Position, Butt Weld

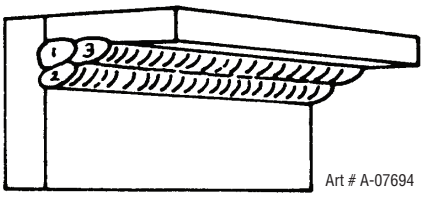

Figure 4-19: Overhead Position, Fillet Weld

Joint Preparations

In many cases, it will be possible to weld steel sections without any special preparation. For heavier sections and for repair work on castings, etc., it will be necessary to cut or grind an angle between the pieces being joined to ensure proper penetration of the weld metal and to produce sound joints.

In general, surfaces being welded should be clean and free of rust, scale, dirt, grease, etc. Slag should be removed from oxy-cut surfaces. Typical joint designs are shown in Figure 4-19.

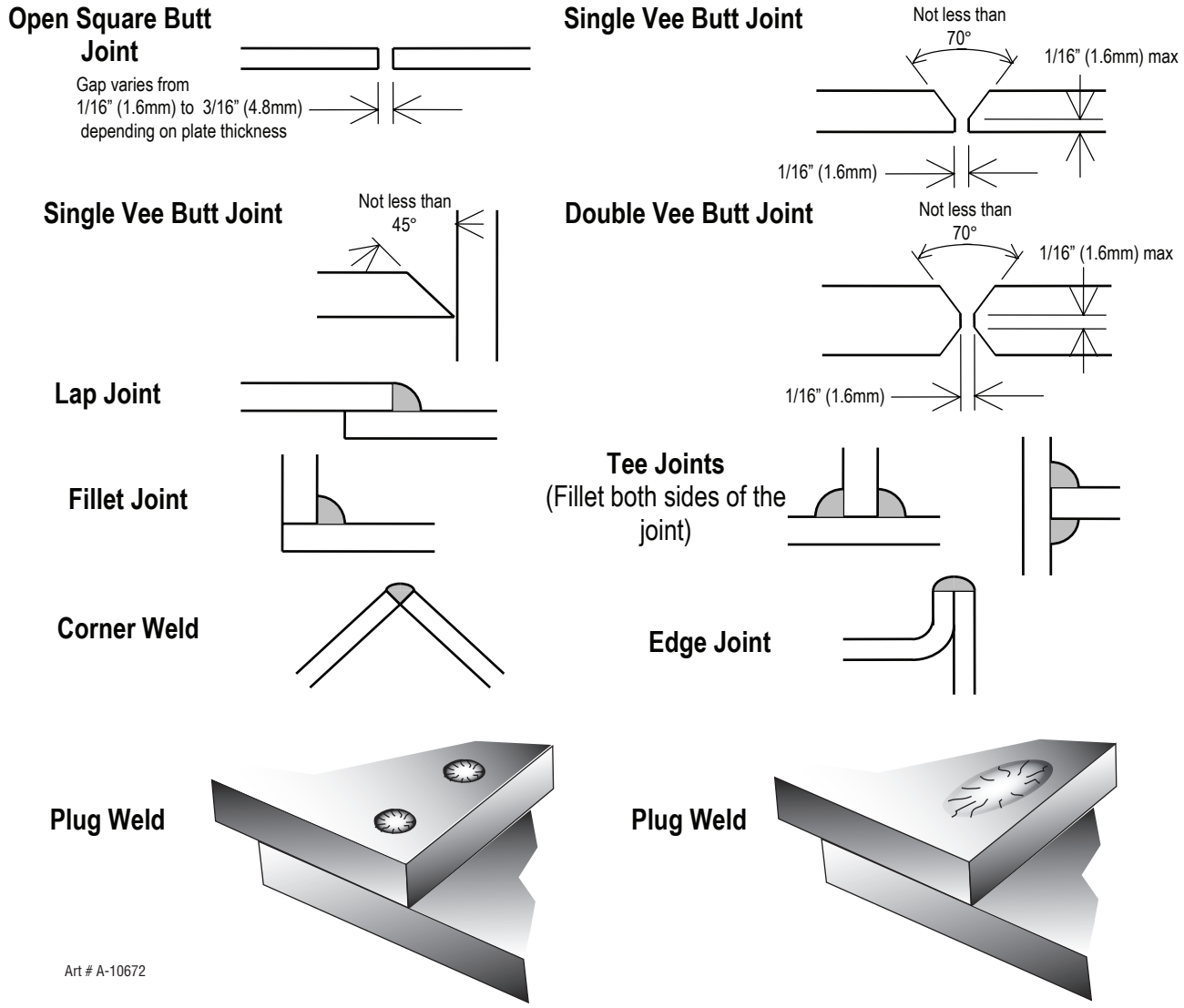

Figure 4-20: Typical Joint Designs for Arc Welding

Arc Welding Technique - A Word to Beginners

For those who have not yet done any welding, the simplest way to commence is to run beads on a piece of scrap plate. Use mild steel plate about 1/4" (6.4 mm) thick and a 1/8" (3.2 mm) electrode. Clean any paint, loose scale or grease off the plate and set it firmly on the work bench so that welding can be carried out in the downhand position. Make sure that the work clamp is making good electrical contact with the work, either directly or through the work table. For light gauge material, always clamp the work lead directly to the job, otherwise a poor circuit will probably result.

The Welder

Place yourself in a comfortable position before beginning to weld. Get a seat of suitable height and do as much work as possible sitting down. Don't hold your body tense. A taut attitude of mind and a tensed body will soon make you feel tired. Relax and you will find that the job becomes much easier. You can add much to your peace of mind by wearing a leather apron and gauntlets. You won't be worrying then about being burnt or sparks setting alight to your clothes.

Place the work so that the direction of welding is across, rather than to or from, your body. The electrode holder lead should be clear of any obstruction so that you can move your arm freely along as the electrode burns down. If the lead is slung over your shoulder, it allows greater freedom of movement and takes a lot of weight off your hand. Be sure the insulation on your cable and electrode holder is not faulty, otherwise you are risking an electric shock.

Striking the Arc

Practice this on a piece of scrap plate before going on to more exacting work. You may at first experience difficulty due to the tip of the electrode "sticking" to the work piece. This is caused by making too heavy a contact with the work and failing to withdraw the electrode quickly enough. A low amperage will accentuate it. This freezing-on of the tip may be overcome by scratching the electrode along the plate surface in the same way as a match is struck. As soon as the arc is established, maintain a 1/16" -1/8" (1.6 mm - 3.2 mm) gap between the burning electrode end and the parent metal. Draw the electrode slowly along as it melts down.

Another difficulty you may meet is the tendency, after the arc is struck, to withdraw the electrode so far that the arc is broken again. A little practice will soon remedy both of these faults.

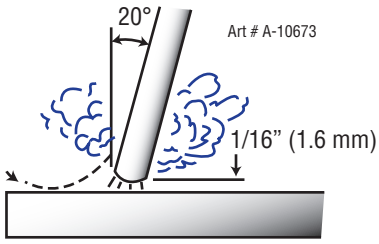

Figure 4-21: Striking an Arc

Arc Length

The securing of an arc length necessary to produce a neat weld soon becomes almost automatic. You will find that a long arc produces more heat. A very long arc produces a crackling or spluttering noise and the weld metal comes across in large, irregular blobs. The weld bead is flattened and spatter increases. A short arc is essential if a high quality weld is to be obtained although if it is too short there is the danger of it being blanketed by slag and the electrode tip being solidified in. If this should happen, give the electrode a quick twist back over the weld to detach it. Contact or "touch-weld" electrodes such as E7014 do not stick in this way, and make welding much easier.

Rate of Travel

After the arc is struck, your next concern is to maintain it, and this requires moving the electrode tip towards the molten pool at the same rate as it is melting away. At the same time, the electrode has to move along the plate to form a bead. The electrode is directed at the weld pool at about 20º from the vertical. The rate of travel has to be adjusted so that a well-formed bead is produced.

If the travel is too fast, the bead will be narrow and strung out and may even be broken up into individual globules. If the travel is too slow, the weld metal piles up and the bead will be too large.

Making Welded Joints

Having attained some skill in the handling of an electrode, you will be ready to go on to make up welded joints.

A. Butt Welds

Set up two plates with their edges parallel, as shown in Figure 4-22, allowing 1/16" - 3/32" (1.6 mm - 2.4 mm) gap between them and tack weld at both ends. This is to prevent contraction stresses from the cooling weld metal pulling the plates out of alignment. Plates thicker than 1/4" (6.4 mm) should have their mating edges beveled to form a 70º to 90º included angle. This allows full penetration of the weld metal to the root. Using a 1/8" (3.2 mm) E7014 electrode at 100 amps, deposit a run of weld metal on the bottom of the joint.

Do not weave the electrode, but maintain a steady rate of travel along the joint sufficient to produce a well-formed bead. At first you may notice a tendency for undercut to form, but keeping the arc length short, the angle of the electrode at about 20º from vertical, and the rate of travel not too fast, will help eliminate this. The electrode needs to be moved along fast enough to prevent the slag pool from getting ahead of the arc. To complete the joint in thin plate, turn the job over, clean the slag out of the back and deposit a similar weld.

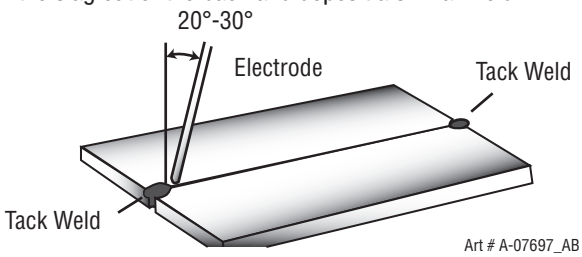

Figure 4-22: Butt Weld

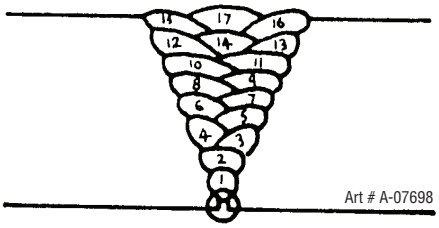

Figure 4-23: Weld Build up Sequence

Heavy plate will require several runs to complete the joint. After completing the first run, chip the slag out and clean the weld with a wire brush. It is important to do this to prevent slag being trapped by the second run. Subsequent runs are then deposited using either a weave technique or single beads laid down in the sequence shown in Figure 4-23. The width of weave should not be more than three times the core wire diameter of the electrode. When the joint is completely filled, the back is either machined, ground or gouged out to remove slag which may be trapped in the root, and to prepare a suitable joint for depositing the backing run. If a backing bar is used, it is not usually necessary to remove this, since it serves a similar purpose to the backing run in securing proper fusion at the root of the weld.

B. Fillet Welds

These are welds of approximately triangular cross-section made by depositing metal in the corner of two faces meeting at right angles. Refer to Figure 4-15.

A piece of angle iron is a suitable specimen with which to begin, or two lengths of strip steel may be tacked together at right angles. Using a 1/8" (3.2 mm) E7014 electrode at 100 amps, position angle iron with one leg horizontal and the other vertical. This is known as a horizontal-vertical (HV) fillet. Strike the arc and immediately bring the electrode to a position perpendicular to the line of the fillet and about 45º from the vertical. Some electrodes require to be sloped about 20º away from the perpendicular position to prevent slag from running ahead of the weld. Refer to Figure 4-24. Do not attempt to build up much larger than 1/4" (6.4 mm) width with a 1/8" (3.2 mm) electrode, otherwise the weld metal tends to sag towards the base, and undercut forms on the vertical leg. Multi-runs can be made as shown in Figure 4-25. Weaving in HV fillet welds is undesirable.

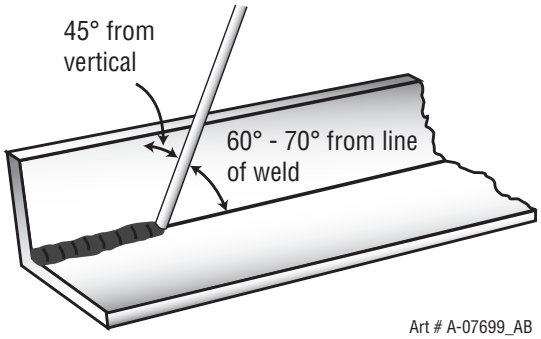

Figure 4-24: Electrode Position for HV Fillet Weld

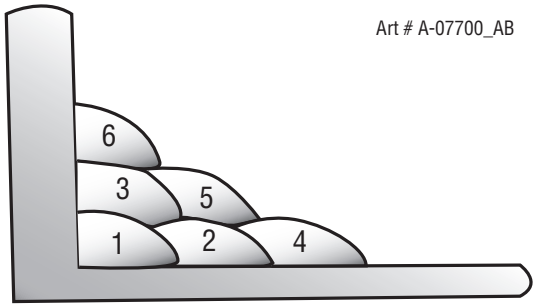

Figure 4-25: Multi-runs in HV Fillet Weld

C. Vertical Welds

1. Vertical Up

Tack weld a three feet length of angle iron to your work bench in an upright position. Use a 1/8" (3.2 mm) E7014 electrode and set the current at 100 amps. Make yourself comfortable on a seat in front of the job and strike the arc in the corner of the fillet. The electrode needs to be about 10º from the horizontal to enable a good bead to be deposited. Refer Figure 4-26. Use a short arc, and do not attempt to weave on the first run. When the first run has been completed de-slag the weld deposit and begin the second run at the bottom. This time a slight weaving motion is necessary to cover the first run and obtain good fusion at the edges. At the completion of each side motion, pause for a moment to allow weld metal to build up at the edges, otherwise undercut will form and too much metal will accumulate in the centre of the weld. Figure 4-27 illustrates multi-run technique and Figure 4-28 shows the effects of pausing at the edge of weave and of weaving too rapidly.

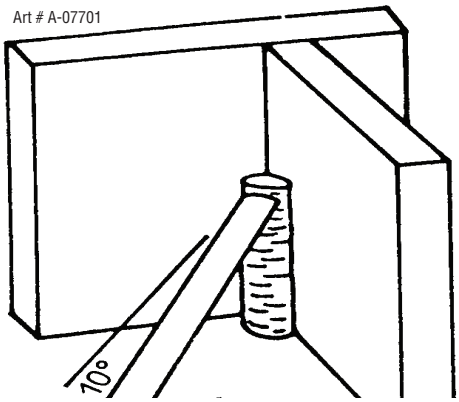

Figure 4-26: Single Run Vertical Fillet Weld

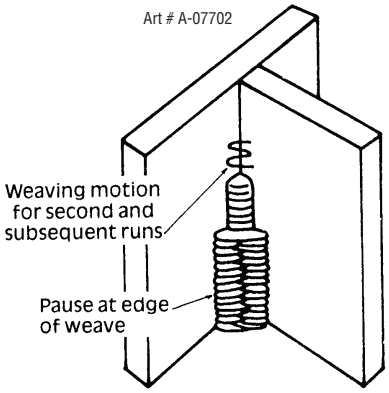

Figure 4-27: Multi Run Vertical Fillet Weld

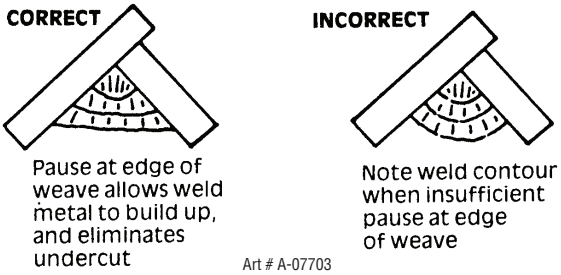

Figure 4-28: Examples of Vertical Fillet Welds

2. Vertical Down

The E7014 electrode makes welding in this position particularly easy. Use a 1/8" (3.2 mm) electrode at 100 amps. The tip of the electrode is held in light contact with the work and the speed of downward travel is regulated so that the tip of the electrode just keeps ahead of the slag. The electrode should point upwards at an angle of about 45º.

3. Overhead Welds

Apart from the rather awkward position necessary, overhead welding is not much more difficult that down-hand welding. Set up a specimen for overhead welding by first tacking a length of angle iron at right angles to another piece of angle iron or a length of waste pipe. Then tack this to the work bench or hold in a vice so that the specimen is positioned in the overhead position as shown in the sketch. The electrode is held at 45º to the horizontal and tilted 10º in the line of travel (Figure 4-29). The tip of the electrode may be touched lightly on the metal, which helps to give a steady run. A weave technique is not advisable for overhead fillet welds. Use a 1/8" (3.2 mm) E6013 electrode at 100 amps, and deposit the first run by simply drawing the electrode along at a steady rate. You will notice that the weld deposit is rather convex, due to the effect of gravity before the metal freezes.

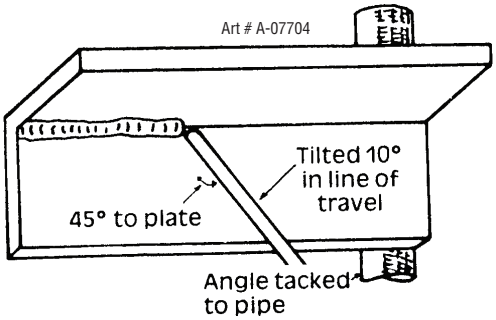

Figure 4-29: Overhead Fillet Weld

Distortion

Distortion in some degree is present in all forms of welding. In many cases it is so small that it is barely perceptible, but in other cases allowance has to be made before welding commences for the distortion that will subsequently occur. The study of distortion is so complex that only a brief outline can be attempted hear.

The Cause of Distortion

Distortion is caused by:

A. Contraction of Weld Metal:

Molten steel shrinks approximately 11 per cent in volume on cooling to room temperature. This means that a cube of molten metal would contract approximately 2.2 per cent in each of its three dimensions. In a welded joint, the metal becomes attached to the side of the joint and cannot contract freely. Therefore, cooling causes the weld metal to flow plastically, that is, the weld itself has to stretch if it is to overcome the effect of shrinking volume and still be attached to the edge of the joint. If the restraint is very great, as, for example, in a heavy section of plate, the weld metal may crack. Even in cases where the weld metal does not crack, there will still remain stresses "Locked-up" in the structure. If the joint material is relatively weak, for example, a butt joint in 5/64" (2.0 mm) sheet, the contracting weld metal may cause the sheet to become distorted.

B. Expansion and Contraction of Parent Metal in the Fusion Zone:

While welding is proceeding, a relatively small volume of the adjacent plate material is heated to a very high temperature and attempts to expand in all directions. It is able to do this freely at right angles to the surface of the plate (i.e., "through the weld", but when it attempts to expand "across the weld" or "along the weld", it meets considerable resistance, and to fulfill the desire for continued expansion, it has to deform plastically, that is, the metal adjacent to the weld is at a high temperature and hence rather soft, and, by expanding, pushes against the cooler, harder metal further away, and tends to bulge (or is "upset". When the weld area begins to cool, the "upset" metal attempts to contract as much as it expanded, but, because it has been "upset" it does not resume its former shape, and the contraction of the new shape exerts a strong pull on adjacent metal. Several things can then happen.

The metal in the weld area is stretched (plastic deformation), the job may be pulled out of shape by the powerful contraction stresses (distortion), or the weld may crack, in any case, there will remain "locked-up" stresses in the job. Figures 4-30 and 4- 31 illustrate how distortion is created.

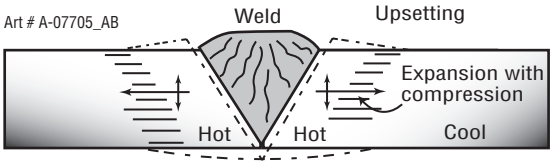

Figure 4-30: Parent Metal Expansion

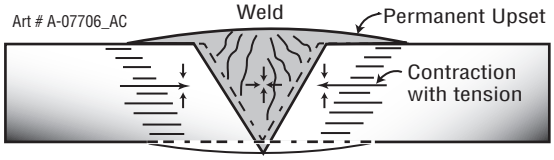

Figure 4-31: Parent Metal Contraction

Overcoming Distortion Effects

There are several methods of minimizing distortion effects.

A. Peening

This is done by hammering the weld while it is still hot. The weld metal is flattened slightly and because of this the tensile stresses are reduced a little. The effect of peening is relatively shallow, and is not advisable on the last layer.

B. Distribution of Stresses

Distortion may be reduced by selecting a welding sequence which will distribute the stresses suitably so that they tend to cancel each other out. See Figures 4-31 through 4-34 for various weld sequences. Choice of a suitable weld sequence is probably the most effective method of overcoming distortion, although an unsuitable sequence may exaggerate it. Simultaneous welding of both sides of a joint by two welders is often successful in eliminating distortion.

C. Restraint of Parts

Forcible restraint of the components being welded is often used to prevent distortion. Jigs, positions, and tack welds are methods employed with this in view.

D. Presetting

It is possible in some cases to tell from past experience or to find by trial and error (or less frequently, to calculate) how much distortion will take place in a given welded structure. By correct pre-setting of the components to be welded, constructional stresses can be made to pull the parts into correct alignment. A simple example is shown in Figure 4-32.

E. Preheating

Suitable preheating of parts of the structure other than the area to be welded can be sometimes used to reduce distortion. Figure 4-33 shows a simple application. By removing the heating source from b and c as soon as welding is completed, the sections b and c will contract at a similar rate, thus reducing distortion.

Figure 4-32: Principle of Presetting

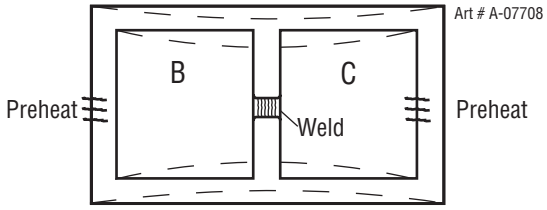

Dotted lines show effect if no preheat is used

Figure 4-33: Reduction of Distortion by Preheating

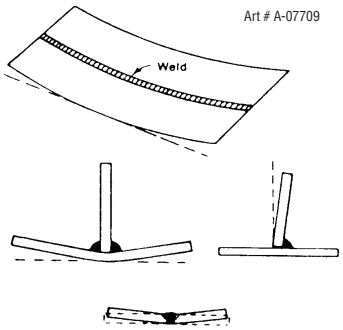

Figure 4-34: Examples of Distortion

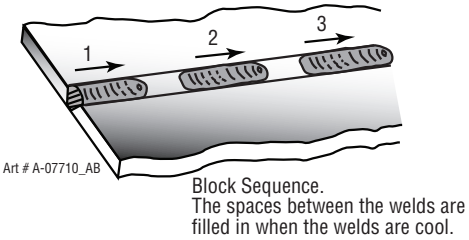

Figure 4-35: Welding Sequence

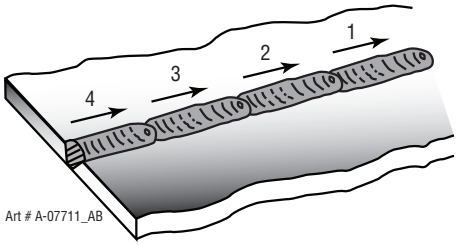

Figure 4-36: Step back Sequence

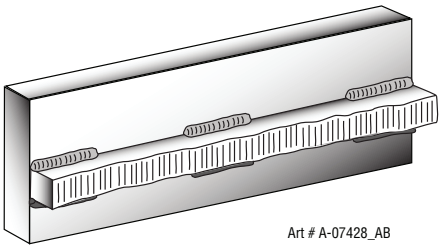

Figure 4-37: Chain Intermittent Welding

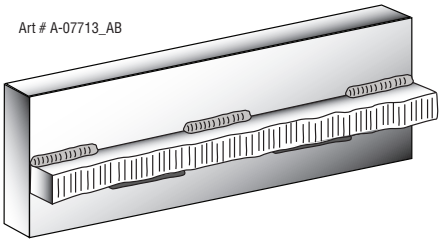

Figure 4-38: Staggered Intermittent Welding

Electrode Selection Chart

METAL BEING JOINED	ELECTRODE	COMMENTS
Mild Steel	E6010	This electrode is used for all-position welding or for welding on rusty, dirty, less-than-new metal. It has a deep, penetrating arc and is used for pipe and repair welding.
Mild Steel	E6011	This electrode is used for all-position welding on sheet metal or for welding on plated, dirty, painted or greasy steel. It has a deep, penetrating arc and is often the first choice for repair or maintenance work.
Mild Steel	E6013	This all-position, electrode is used for welding clean, new sheet metal. Its soft arc has minimal spatter, moderate penetration and an easy-to-clean slag.
Mild Steel	E7014	All positional, easy to use electrode for use on thicker steel than E6013. Especially suitable for sheet metal lap joints and fillet welds, general purpose plate welding.
Mild Steel	E7018	A low-hydrogen, all-position electrode used when quality is an issue or for hard-to-weld metals. It has the capability of producing more uniform weld metal, which has better impact properties at low temperatures.
Cast Iron	ENi-CI	Suitable for joining all cast irons except white cast iron.
Stainless Steel	E318L-16	High corrosion resistances. Ideal for dairy work etc.

Table 4-4: ESAB Electrode Selection Chart

4.04 STICK (SMAW) Welding Troubleshooting

FAULT	CAUSE	REMEDY
1 Welding current varying	ARC FORCE is set at a value that causes the welding current to vary excessively with the arc length.	Reduce the ARC FORCE until welding current is reasonably constant while prohibiting the electrode from sticking to the work piece when you “dig” the electrode into the workpiece.
2 A gap is left by failure of the weld metal to fill the root of the weld.	A Welding current too low B Electrode too large for joint. C Insufficient gap.	A Increase welding current. B Use smaller diameter electrode. C Allow wider gap.
3 Non-metallic particles are trapped in the weld metal.	A Non-metallic particles may be trapped in undercut from previous run. B Joint preparation too restricted. C Irregular deposits allow slag to be trapped. D Lack of penetration with slag trapped beneath weld bead. E Rust or mill scale is preventing full fusion. F Wrong electrode for position in which welding is done.	A If a bad undercut is present clean slag out and cover with a run from a smaller gauge electrode. B Allow for adequate penetration and room for cleaning out the slag. C If very bad, chip or grind out irregularities. D Use smaller electrode with sufficient current to give adequate penetration. Use suitable tools to remove all slag from comers. E Clean joint before welding. F Use electrodes designed for position in which welding is done, otherwise proper control of slag is difficult.

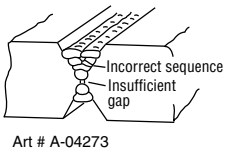

Figure 4-39: Example of insufficient gap or incorrect sequence

Table 4-5a:

FAULT	CAUSE	REMEDY
4 A groove has been formed in the base metal adjacent to the toe of a weld and has not been filled by the weld metal (undercut).	A Welding current is too high.	A Reduce welding current.
	B Welding arc is too long.	B Reduce the length of the welding arc.
	C Angle of the electrode is incorrect.	C Electrode should not be inclined less than 45° to the vertical face.
	D Joint preparation does not allow correct electrode angle.	D Allow more room in joint for manipulation of the electrode.
	E Electrode too large for joint.	E Use smaller gauge electrode.
	F Insufficient deposit time at edge of weave.	F Pause for a moment at edge of weave to allow weld metal buildup.
	G Power source is set for MIG (GMAW) welding.	G Set power source to STICK (SMAW) mode.
5 Portions of the weld run do not fuse to the surface of the metal or edge of the joint.	A Small electrodes used on heavy cold plate.	A Use larger electrodes and preheat the plate.
	B Welding current is too low.	B Increase welding current.
	C Wrong electrode angle.	C Adjust angle so the welding arc is directed more into the base metal.
	D Travel speed of electrode is too high.	D Reduce travel speed of electrode.
	E Scale or dirt on joint surface.	E Clean surface before welding.

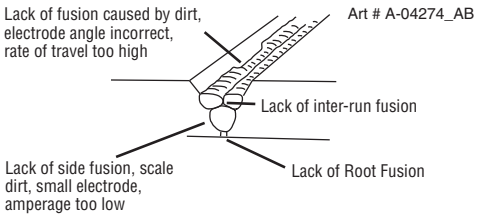

Figure 4-40: Example of Lack of Fusion

Table 4-5b: STICK (SMAW) metal welding trouble shooting

4.05 TIG (GTAW) Basic Welding Technique

Gas Tungsten Arc Welding (GTAW) or TIG (Tungsten Inert Gas) as it is commonly referred to, is a welding process in which fusion is produced by an electric arc that is established between a single tungsten (non-consumable) electrode and the work piece. Shielding is obtained from a welding grade shielding gas or welding grade shielding gas mixture which is generally Argon based. A filler metal may also be added manually in some circumstances depending on the welding application.

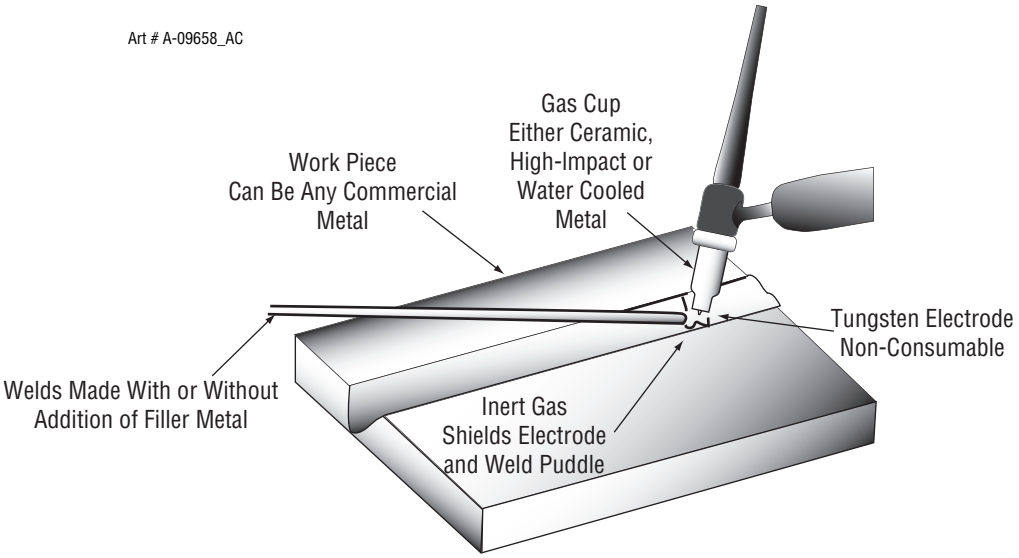

Figure 4-41: TIG (GTAW) Welding Application Shot

Tungsten Electrode Current Ranges

Electrode Diameter	DC Current (Amps)
0.040” (1.0mm)	30-60
1/16” (1.6mm)	60-115
3/32” (2.4mm)	100-165
1/8” (3.2mm)	135-200
5/32” (4.0mm)	190-280
3/16” (5mm)	250-340

Table 4-6: Current Ranges for Various Tungsten Electrode Sizes

Guide for Selecting Filler Wire Diameter

Filler Wire Diameter	DC Current Range (Amps)
1/16” (1.6mm)	20-90
3/32” (2.4mm)	65-115
1/8” (3.2mm)	100-165
3/16” (5mm)	200-350

Table 4-7: Filler Wire Selection Guide

Tungsten Electrode Types

Electrode Type (Ground Finish)	Welding Application	Features	Color Code
Thoriated 2%	DC welding of mild steel, stainless steel and copper	Excellent arc starting, Long life, High current carrying capacity	Red
Zirconated 1%	High quality AC welding of aluminum, magnesium and their alloys.	Self cleaning, Long life, Maintains balled end, High current carrying capacity.	White
Ceriated 2%	AC & DC welding of mild steel, stainless steel, copper, aluminum, magnesium and their alloys	Longer life, More stable arc, Easier starting, Wider current range, Narrower more concentrated arc.	Grey

Table 4-8

NOTE!
The Fabricator 252i Inverter is not suited for AC TIG welding.

TIG Welding Filler Rods

Base Metal Thickness	DC Current for Mild Steel	DC Current for Stainless Steel	Tungsten Electrode Diameter	Filler Rod Diameter (if required)	Argon Gas Flow Rate CFH	Joint Type
0.040” 1.0mm	35-45 40-50	20-30 25-35	0.040” 1.0mm	1/16” 1.6mm	10-15	Butt/Corner Lap/Fillet
0.045” 1.2mm	45-55 50-60	30-45 35-50	0.040” 1.0mm	1/16” 1.6mm	10-15	Butt/Corner Lap/Fillet
1/16” 1.6mm	60-70 70-90	40-60 50-70	1/16” 1.6mm	1/16” 1.6mm	15	Butt/Corner Lap/Fillet
1/8” 3.2mm	80-100 90-115	65-85 90-110	1/16” 1.6mm	3/32” 2.4mm	15	Butt/Corner Lap/Fillet
3/16” 4.8mm	115-135 140-165	100-125 125-150	3/32” 2.4mm	1/8” 3.2mm	20	Butt/Corner Lap/Fillet
1/4” 6.4mm	160-175 170-200	135-160 160-180	1/8” 3.2mm	5/32” 4.0mm	20	Butt/Corner Lap/Fillet

Table 4-9

TIG Welding is generally regarded as a specialized process that requires operator competency. While many of the principles outlined in the previous Arc Welding section are applicable a comprehensive outline of the TIG Welding process is outside the scope of this Operating Manual.

4.06 TIG (GTAW) Welding Problems

FAULT	CAUSE	REMEDY
1 Excessive beard build up or poor penetration or poor fusion at edges of weld.	Welding current is too low	Increase weld current and/or faulty joint preparation.
2 Weld bead too wide and flat or undercut at edges of weld or excessive burn through.	Welding current is too high	Decrease weld current.
3 Weld bead too small or insufficient penetration or ripples in bead are widely spaced apart.	Travel speed too fast	Reduce travel speed.
4 Weld bead too wide or excessive bead build up or excessive penetration in butt joint.	Travel speed too slow	Increase travel speed.
5 Uneven leg length in fillet joint	Wrong placement of filler rod	Re-position filler rod.
6 Electrode melts or oxidizes when an arc is struck.	A TIG Torch lead connected to positive welding terminal.	A Connect TIG Torch lead to negative welding terminal.
	B No gas flowing to welding region.	B Check the gas lines for kinks or breaks and gas cylinder contents.
	C TIG Torch is clogged with dust or dirt.	C Clean TIG Torch.
	D Gas hose is cut.	D Replace gas hose.
	E Gas passage contains impurities.	E Disconnect gas hose from the rear of Power Source then raise gas pressure and blow out impurities.
	F Gas regulator turned OFF.	F Turn ON.
	G TIG Torch valve is turned OFF.	G Turn ON.
	H The electrode is too small for the welding current.	H Increase electrode diameter or reduce the welding current.
	I Power source is set for MIG welding.	I Set Power Source to LIFT TIG mode.

FAULT	CAUSE	REMEDY
7 Dirty weld pool	A Electrode contaminated by contact with work piece or filler rod material.	A Clean the electrode by grinding off the contaminates.
	B Work piece surface has foreign material on it.	B Clean surface.
	C Gas contaminated with air.	C Check gas lines for cuts and loose fitting or change gas cylinder.
8 Poor weld finish	Inadequate shielding gas.	Increase gas flow or check gas line for gas flow problems.
9 Arc start is not smooth.	A Tungsten electrode is too large for the welding current.	A Select the right size electrode. Refer to Table 4-6 ESAB Electrode Selection Chart.
	B The wrong electrode is being used for the welding job.	B Select the right electrode type. Refer to Table 4-8 ESAB Electrode Selection Chart.
	C Gas flow rate is too high.	C Select the right rate for the welding job. Refer to Table 4-10.
	D Incorrect shielding gas is being used.	D Select the right shielding gas.
	E Poor work clamp connection to work piece.	E Improve connection to work piece.
10 Arc flutters during TIG welding.	Tungsten electrode is too large for the welding current.	Select the right size electrode. Refer to Table 4-6 ESAB Electrode Selection Chart.

Table 4-10: TIG (GTAW) Welding Problems

SECTION 5: POWER SOURCE PROBLEMS AND ROUTINE SERVICE REQUIREMENTS

5.01 Power Source Problems

Error Code		CAUSE	REMEDY
ERR 01	Over Temperature Fault	OverTemp signal from Power board indicates Over temperature fault condition of power components	A. Decrease duty cycle of welding activity B. Ensure that air vents are not blocked/obstructed C. Consult an Accredited ESAB Service Provider.
ERR 02	Input Power Fault	Signal from Power board indicates input power voltage is out of range (too high or too low)	A. Check input power connections and cables for damage or improper insertion B. Verify input voltage levels meet product requirements
ERR 03	VBIAS Voltage Low Fault	Controller board circuit monitor indicates 15 volt supply is too low (< 13.7 VDC)	Consult an Accredited ESAB Service Provider.
ERR 04	Ground Fault	Excessive current detected on Ground wire of power connection	A. Isolate welder chassis from work piece. Check workpiece ground connection. B. Check for MIG wire feed problem in spool/feedplate. Verify wire is not contacting chassis.
ERR 08	Input Sensor Fault	Unexpected reading of voltage or current sensor during power-up self test	A. Inspect ribbon cable between power supply and display board. B. Consult an accredited ESAB service provider.
ERR 09	Fan Fault	Cooling Fan Failure detected on Inverter board	A. Examine fan vents for potential obstruction. B. Consult an Accredited ESAB Service Provider.
ERR 10	Inverter Output Fault	Substandard output voltage condition detected by controller before weld started	Consult an Accredited ESAB Service Provider.
ERR 14	Trigger Fault	Fault occurred detecting trigger state/condition	A. Trigger may be already activated when MIG process mode is selected - verify that trigger is not accidentally activated B. Trigger may be faulty and/or dirty, test and replace MIG Gun/trigger device
ERR 15	Wirefeed Fault	Welder detects prolonged open circuit during MIG weld	A. Inspect MIG wire spool and feedplate for improper tension or 'bird's nest'. B. Inspect MIG Gun and cable for damage or obstruction C. Consult an Accredited ESAB Service Provider.
ERR 23	Weld Fault	Welder detected a fault during the weld process	Consult an Accredited ESAB Service Provider if symptom recurs frequently.
ERR 24	Code Memory Fault	Welder detected a fault in program flash memory	Firmware image is corrupted. Consult an Accredited ESAB Service Provider.
ERR 25	Nonvolatile Memory Fault	Welder detected a fault in parameter NVROM.	A. Welding may still be possible, but no weld setting changes can be saved. B. Consult an Accredited ESAB Service Provider.
ERR 26	Unknown PCB Fault	Welder control board cannot identify an attached inverter board and/or determine its own identity	Consult an Accredited ESAB Service Provider.
ERR 30	Service Mode Switch Fault	SERVICE DIP switch is enabled	Welding is disabled while SERVICE Mode DIP switch is enabled. Disable SERVICE Mode switch to resume welding.

ERR 31	Controller Fault	Welder control board has detected a hardware fault on itself	Consult an Accredited ESAB Service Provider if symptom recurs frequently.
ERR 33	Calibration Fault	An output (current, voltage, or motor) fault was detected while attempting a calibration process	A. Check integrity of welder cables, MIG Gun or electrode holder and retry calibration. B. Check MIG wire spool, feedplate area for wire feed issues, correct and retry calibration
ERR 34	User Calibration Abort	User-initiated abort/interruption of an active calibration process occurred (usually, release of trigger too early)	Restart/reselect calibration process and retry calibration when ready.
ERR 35	Parameter Fault	Welder control board has detected a parameter out of range	System Parameter re-initialization has been automatically performed or is required (Factory Default Reset)
Note 1: If the left display is alternate flashing "Err" and "Code" this is indicating that the fault was detected but has either stopped occurring or is in the process of clearing itself. If this is the case, the flashing error message will return to normal display functionality within 10 seconds unless another fault occurs. If the left display shows a steady "Err" this is indicating that the fault is persistent and is still being detected. *Note 2: Flashing Amperage and Voltage displays (when welding) indicates that the machines maximum output power rating (300A x 26.7V = 8kVA) is being exceeded and the system is automatically reducing the output. If welding is ceased while the displays are flashing, the last values will be displayed for 10 seconds or until controls are adjusted.*			

Table 5-1: Power Source Problems

5.02 Routine Service and Calibration Requirements

WARNING
There are extremely dangerous voltage and power levels present inside this Inverter Power Source. Do NOT attempt to open or repair unless you are an accredited ESAB Service Provider. Disconnect the Welding Power Source from the Mains Supply Voltage before disassembling.

Routine Inspection, Testing & Maintenance

A. Testing Schedule

1. For transportable equipment, at least once every 3 months; and
2. For fixed equipment, at least once every 12 months.

The owners of the equipment shall keep a suitable record of the periodic tests and a system of tagging, including the date of the most recent inspection.

A transportable power source is deemed to be any equipment that is not permanently connected and fixed in the position in which it is operated.

B. Insulation Resistance

Minimum insulation resistance for in-service ESAB Inverter Power Sources shall be measured at a voltage of 500V between the parts referred to in Table 5-2 below. Power sources that do not meet the insulation resistance requirements set out below shall be withdrawn from service and not returned until repairs have been performed such that the requirements outlined below are met.

Components to be Tested	Minimum Insulation Resistance (MΩ)
Input circuit (including any connected control circuits) to welding circuit (including any connected control circuits)	5
All circuits to exposed conductive parts	2.5
Welding circuit (including any connected control circuits) to any auxiliary circuit which operates at a voltage exceeding extra low voltage	10
Welding circuit (including any connected control circuits) to any auxiliary circuit which operates at a voltage not exceeding extra low voltage	1
Separate welding circuit to separate welding circuit	1

Table 5-2: Minimum Insulation Resistance Requirements: ESAB Inverter Power Sources

C. Earthing/Grounding

The resistance shall not exceed 1Ω between any metal of a power source where such metal is required to be earthed, and -

1. The earth terminal of a fixed power source; or
2. The earth terminal of the associated plug of a transportable power source

Note that due to the dangers of stray output currents damaging fixed wiring, the integrity of fixed wiring supplying ESAB welding power sources should be inspected by a licensed electrical worker in accordance with the requirements below -

1. For outlets/wiring and associated accessories supplying transportable equipment - at least once every 3 months; and
2. For outlets/wiring and associated accessories supplying fixed equipment - at least once every 12 months.

D. General Maintenance Checks

Welding equipment should be regularly checked by an accredited ESAB Service Provider to ensure that:

1. Flexible cord is of the multi-core tough rubber or plastic sheathed type of adequate rating, correctly connected and in good condition.
2. Welding terminals are in suitable condition and are shrouded to prevent inadvertent contact or short circuit.
3. The Welding System is clean internally, especially from metal filing, slag, and loose material.

E. Accessories

Accessory equipment, including output leads, electrode holders, torches, wire feeders and the like shall be inspected at least monthly by a competent person to ensure that the equipment is in a safe and serviceable condition. All unsafe accessories shall not be used.

F. Repairs

If any parts are damaged for any reason, it is recommended that replacement be performed by an accredited ESAB Service Provider.

Power Source Calibration

A. Schedule

Output testing of all ESAB Power Sources and applicable accessories shall be conducted at regular intervals to ensure they fall within specified levels. Calibration intervals shall be as outlined below -

1. For transportable equipment, at least once every 3 months; and
2. For fixed equipment, at least once every 12 months.

B. Calibration Requirements

Where applicable, the tests outlined in Table 5-4 below shall be conducted by an accredited ESAB service agent.

Testing Requirements
Output current (A) to be checked to ensure it falls within applicable ESAB power source specifications
Output Voltage (V) to be checked to ensure it falls within applicable ESAB power source specifications
Motor Speed (Inches Per Minute) of wire drive motors to be checked to ensure it falls within required ESAB power source / wire feeder specifications
Accuracy of digital meters to be checked to ensure it falls within applicable ESAB power source specifications

Table 5-4: Calibration Parameters

Periodic calibration of other parameters such as timing functions are not required unless a specific fault has been identified.

C. Calibration Equipment

All equipment used for Power Source calibration shall be in proper working condition and be suitable for conducting the measurement in question. Only test equipment with valid calibration certificates (NATA certified laboratories) shall be utilized.

5.03 Cleaning the Welding Power Source

Warning!
Disconnect input power before maintaining.

Maintain more often if used under severe conditions

Each Use

Visual check of regulator and pressure

Visual check of torch Consumable parts

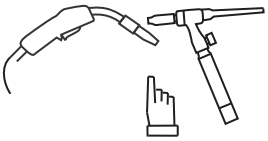

Weekly

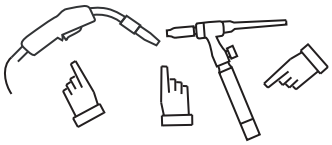

Visually inspect the torch body and consumables

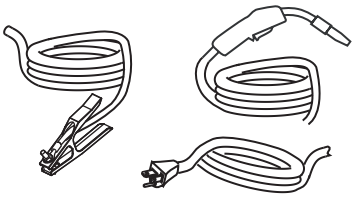

Visually inspect the cables and leads. Replace as needed

3 Months

Replace all broken parts

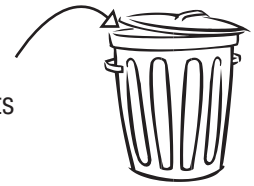

Clean exterior of power supply

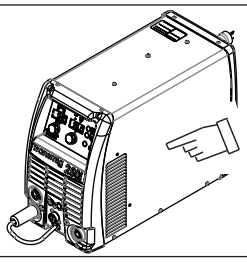

6 Months

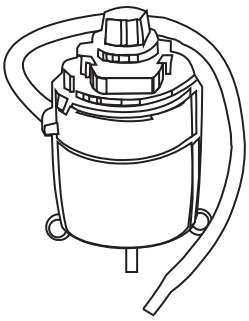

Bring the unit to an authorized Tweco Service Provider to remove any accumulated dirt and dust from the interior. This may need to be done more frequently under exceptionally dirty conditions.

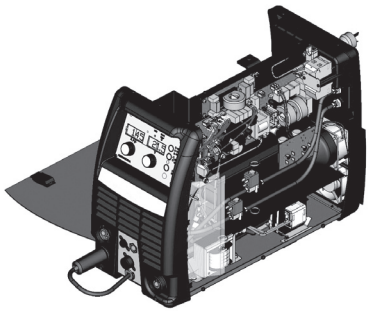

Art # A-10502_AB

Figure 5-1: Routine Cleaning

5.04 Cleaning the Feed Rolls

Clean the grooves in the drive rolls frequently. This can be done by using a small wire brush. Also wipe off, or clean the grooves on the upper feed roll. After cleaning, tighten the feed roll retaining knobs.

CAUTION
Do NOT use compressed air to clean the Welding Power Source. Compressed air can force metal particles to lodge between live electrical parts and earthed metal parts within the Welding Power Source. This may result in arcing between these parts and their eventual failure.

SECTION 6: KEY SPARE PARTS

6.01 Fabricator 252i Power Supply Replacement Panels

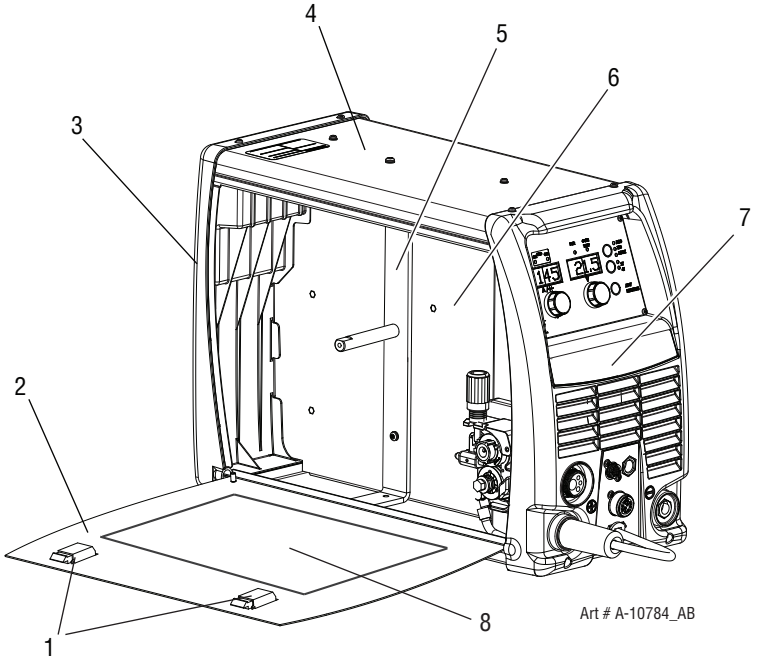

Figure 6-1

FABRICATOR 252i POWER SOURCE SPARE PARTS (Panels/Sheet Metal)		
ITEM	**PART NUMBER**	**DESCRIPTION**
1	W7005323	Latch, Slide
2	W7005438	Door, 252i
3	W7005385	Panel, Rear, 252i
4	W7005439	Panel, Side, 252i
5	W7005303	Bkt, Spool Support, 252i
6	W7005300	Panel, Center, 252i
7	W7005437	Panel, Front 252i
8	831596	Door chart label

Table 6-1

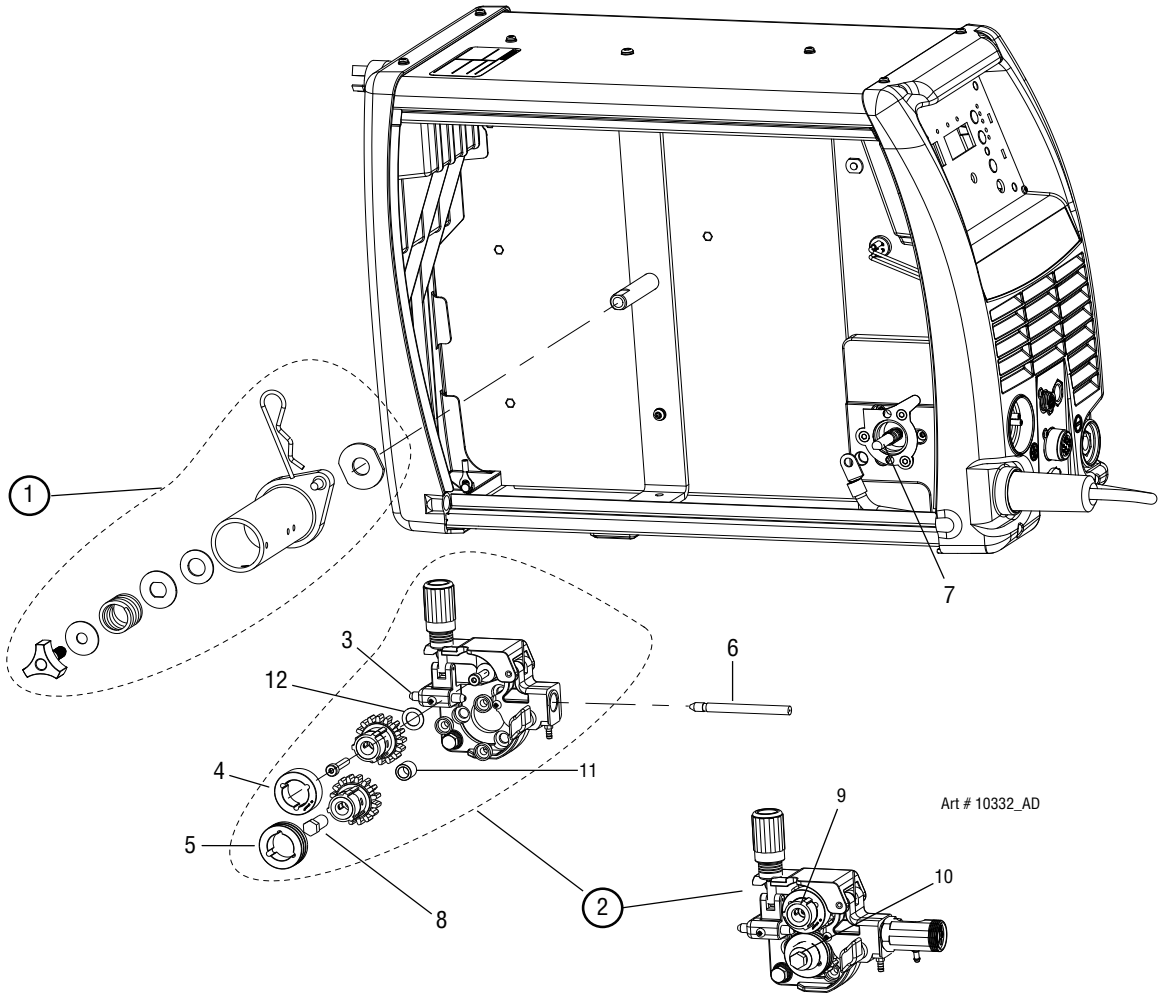

Figure 6-2

FABRICATOR 252i POWER SOURCE SPARE PARTS (LEFT SIDE)		
ITEM	**PART NUMBER**	**DESCRIPTION**
1	W7005311	Spool Hub Assembly
2	W7005353	Wire Drive Assembly, 250i. (Does not include motor)
3	375838-002	Guide, Inlet 0.6-1.6mm
4	See Appendix 1	Roll, Pressure No Groove
5	See Appendix 1	Roll, Feed Dual V
6	W6000801	Guide, Outlet 0.9-1.2mm
7	W7005354	Motor, Wire Drive, RH, 20VDC.
8	W7005361	Retainer, Drive Gear, 2R
9	871001PKD	Idler Gear
10	870560PKD	Drive Gear
11	W7005379	Black Plastic Spacer
12	831508	Clear Mylar Sheet

Table 6-3

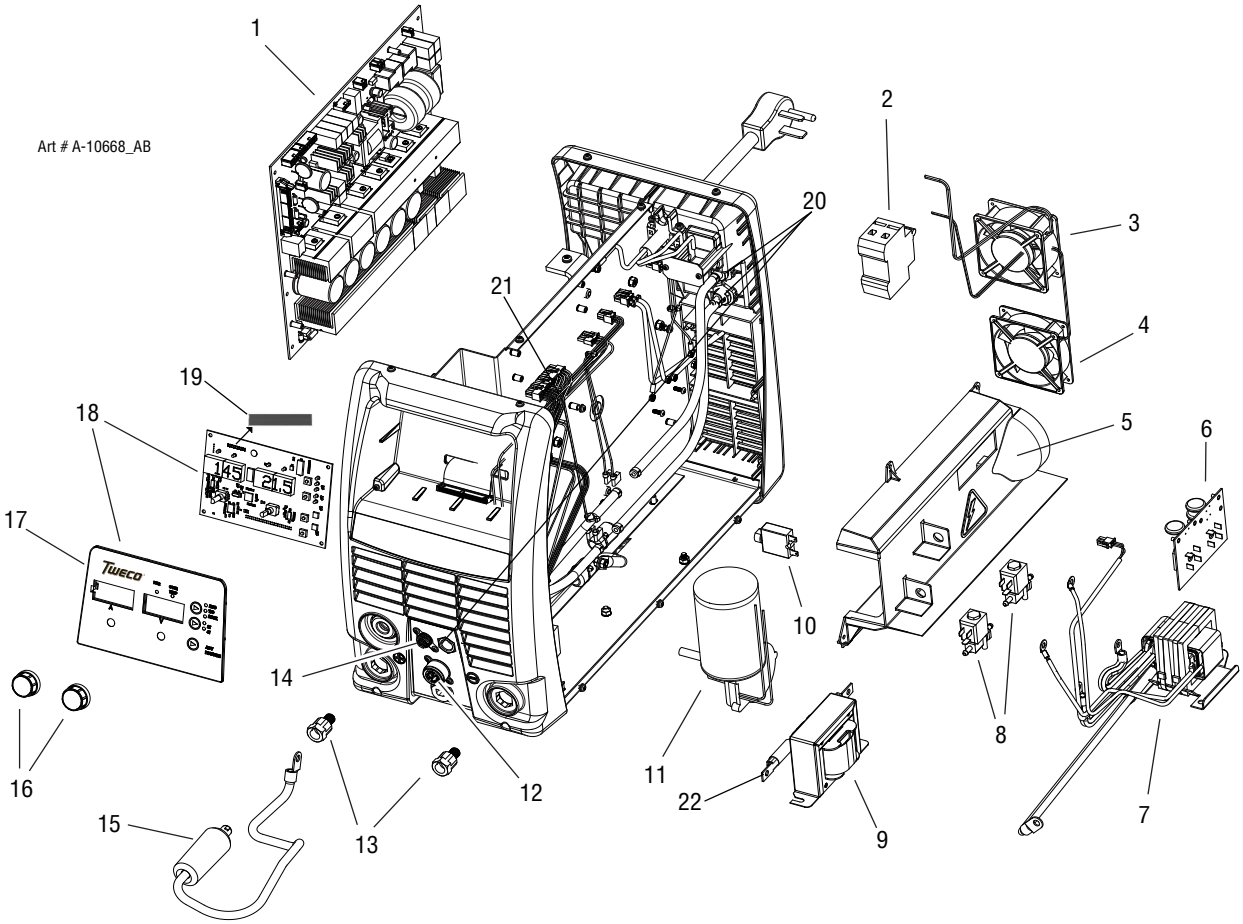

Figure 6-3: Right side and Front Replacement Parts

FABRICATOR 252i POWER SOURCE SPARE PARTS (RIGHT SIDE AND FRONT)		
ITEM	**PART NUMBER**	**DESCRIPTION**
1	W7005330	PCB, 252i Main Power
2	W7005318	Circuit Breaker, 50A (On Off Switch)
3	W7005316	Fan, 92x38 HS 24V
4	W7005317	Fan, 92x25 LS 24V
5	W7005322	Shroud, Heatsink Tunnel
6	W7005331	PCB, Mov/Bridge, 250A
7	W7005302	Transformer, Main, 252i
8	W7005315	Solenoid,24V,0-0.8MPa
9	W7005301	Inductor, 252i
10	W7005355	Circuit Breaker, PB, 8A
11	W7005354	Motor, Wire Drive, RH, 20VDC
12	W7005357	Socket 10 pin (Note: 10 pin Control Plug Part# is W7005358)
13	W7005381	Dinse, Socket Panel, 50mm
14	W7005307	Socket 8 pin (Note: 8 pin Control Plug Part# is UOA706900)
15	W7005308	Assy, Polarity Cable, 252i
16	W7005335	Knob, 15/64", D Shaft, Snap Fit
17	W7005436	Panel, Control, 252i (w/label)
18	W7005381	PCB, Control Assy, 252i
19	W7005352	Ribbon Cable
20	W7005362	Panel Mounted Gas Fitting
21	W7005305	Wiring Harness, with plugs
22	W7005324	Current Transformer

Table 6-3

6.02 ESAB Fusion 250A MIG Gun

Torch Part No: FV215TA-3545

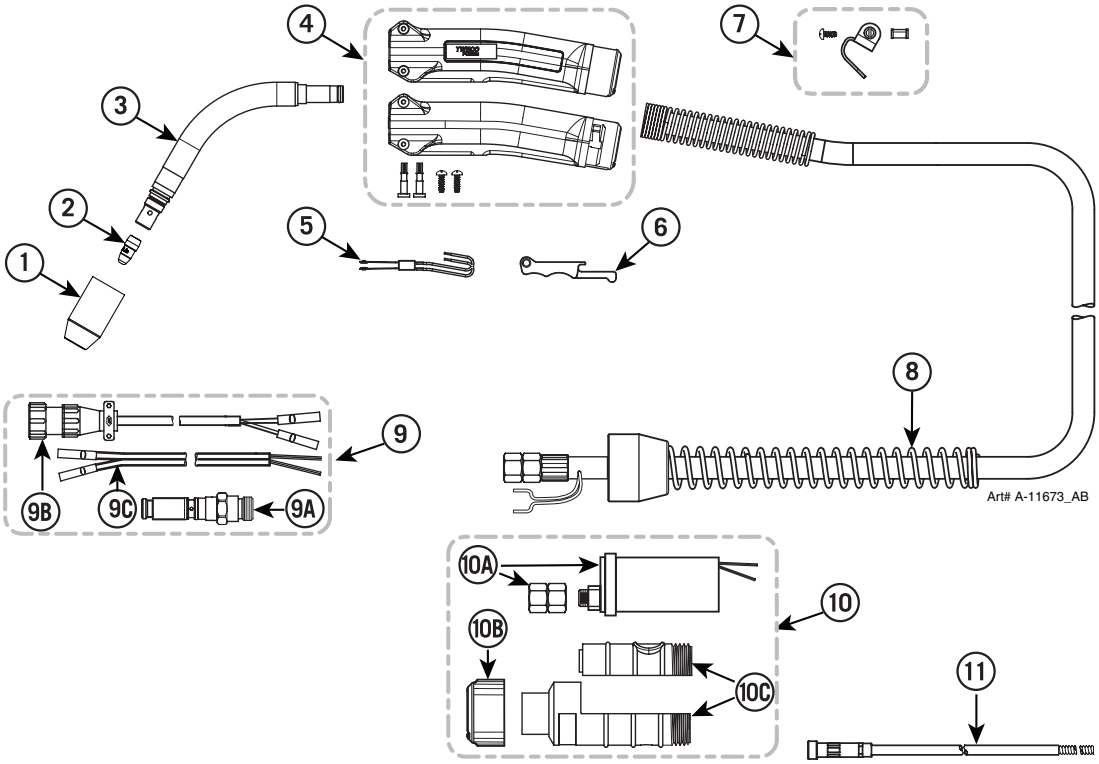

Figure 6-4: ESAB Fusion 250 A MIG Gun

Item No.	Description	Part No.
1	Velocity Nozzle*	VNS-50
		VNS-50F
		VNS-62
		VNS-62F
		VNS-37
		VNS-37F
		VNS-75FAS
2	Velocity Contact Tip*	VTS-23
		VTS-30
		VTS-35
		VTS-40
		VTS-45
		VTSA-364
		VTS-52
		VTS-116
		VTSA-116
		VTS-564
3	Velocity 45˚ Conductor Tube	FVCT-S45
	Velocity 60˚ Conductor Tube	FVCT-S60
4	Handle Halves w/screws	F84
5	Trigger – Standard	ELC84
6	Trigger Blade Assembly	ELC94-BL
7	Gun Hanger	152

Item No.		Description	Part No.
8	NS	Cablehoz Assembly – 10 ft (3 m)	MS210
		Cablehoz Assembly – 12 ft (4 m)	MS212
		Cablehoz Assembly – 15 ft (5 m)	MS210
		Cablehoz Assembly – 25 ft (8 m)	MS225
		Cablehoz Assembly, Euro-Kwik – 12 ft (4 m)	MS212X
		Cablehoz Assembly, Euro-Kwik – 15 ft (5 m)	MS215X
		Cablehoz Assembly, Euro-Kwik – 25 ft (8 m)	MS225X
	8A	Cablehoz Front Mechanical Connector Replacement Kit	MS102-RK
	8B	Cablehoz Rear Mechanical Connector Replacement Kit	MS172-RK
	8C	Cablehoz Front Mechanical Connector Replacement Kit for Euro-Style	172X-M
9	9A	Miller® Rear Connector	350-174MH
	9B	Miller® Control Wire & Plug	WM354-M
10	10A	ESAB® Rear Connector	350-174H
	10B	ESAB Control Wire & Plug	35K-350-1
	10C	ESAB Control Wire & Plug	WS-354-TA-LC
11	11A	Lincoln® Rear Connector	350-174HXL
	11B	Lincoln® Control Wire & Plug	WM354-M
12	12A	Euro-Kwik Connection Assembly	174EX-1
	12B	Euro-Kwik Nut	174X-2
	12C	Euro-Kwik Connector Case	X6RC
13		Conduit Assembly**	**

Table 6-4: ESAB Fusion 250 A MIG Gun Parts

* Patent Pending

** Refer to ESAB Catalog No. for specific parts.

MILLER is a registered trademark of Miller Electric Mfg. Co.; ESAB is a registered trademark of ESAB AB; LINCOLN is a registered trademark of LINCOLN Electric Co.; The aforementioned registered trademarks are no way affiliated with ESAB Products, Inc. or Victor Technologies. ESAB is a registered trademark of Victor Technologies.

This Page Intentionally Blank

APPENDIX 1: OPTIONS AND ACCESSORIES

Description	Part Number
ESAB Fusion 250A MIG Gun, 15ft	1023-1097
26 TIG torch 12.5ft (3.8m); accessory kit with 1/16”, 3/32”, 1/8” thoriated tungstens with collets, collet bodies No.5,6,7 Alumina Nozzle - Gas Hose 9” (230mm) long with 5/8” 18 UNF male fitting, Torch switch & remote current control with 8 pin plug	W4013600
Gas Hose,12.5ft,Male 5/8-18UNF	W4013900
Roll Cage, 252i	W4015101
Large HD Cart,Single Cylinder,211i-252i	W4015001
Large HD Cart, Dual Cylinder, 211i-252i	W4015002
Basic Utility Cart, Single Cylinder, 211i-252i	W4014700
Adapter Cable for Miller® Spool Gun	SG200M30AJC
Accessory Kit	P062900010

Table A-1: Options and Accessories

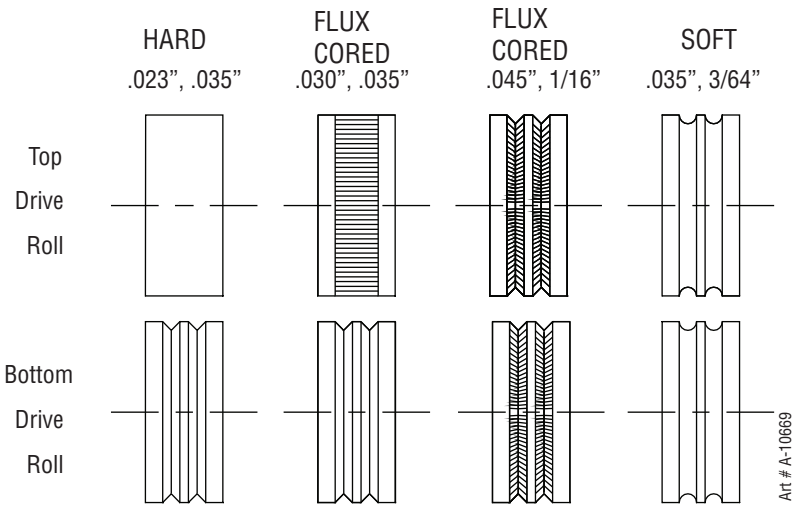

Figure A-1: Drive Roll Chart

Wire Size	Wire Type	Top Drive Roll	Bottom Drive Roll	Inlet Guide	Outlet Guide
.023" (0.6mm)	Hard	407002-001	407002-002	375407-001	W6000803
.030" (0.8mm)	Hard	407002-001	407002-009	375407-001	W6000804
.035" (0.9mm)	Hard	407002-001	407002-009	375407-001	W6000804
.045" (1.2mm)	Hard	407002-001	407002-009	375407-001	W6000804
.030" (0.8mm)	Flux Cored	375832	407002-009	375407-001	W6000804
.035" (0.9mm)	Flux Cored	375832	407002-009	375407-001	W6000804
.045" (1.2mm)	Flux Cored	170924-010	170924-010	375407-001	W6000804
1/16" (1.6mm)	Flux Cored	170924-001	170924-001	375407-001	W6000805
.035" (0.9mm)	Soft	408023-001	408023-001	375647	W6000804
3/64" (1.2mm)	Soft	408023-002	408023-002	375647	W6000804

Table A-2: Wire, Drive Roll and Guide Recommended Combinations

APPENDIX 2: FABRICATOR 252i CIRCUIT DIAGRAM

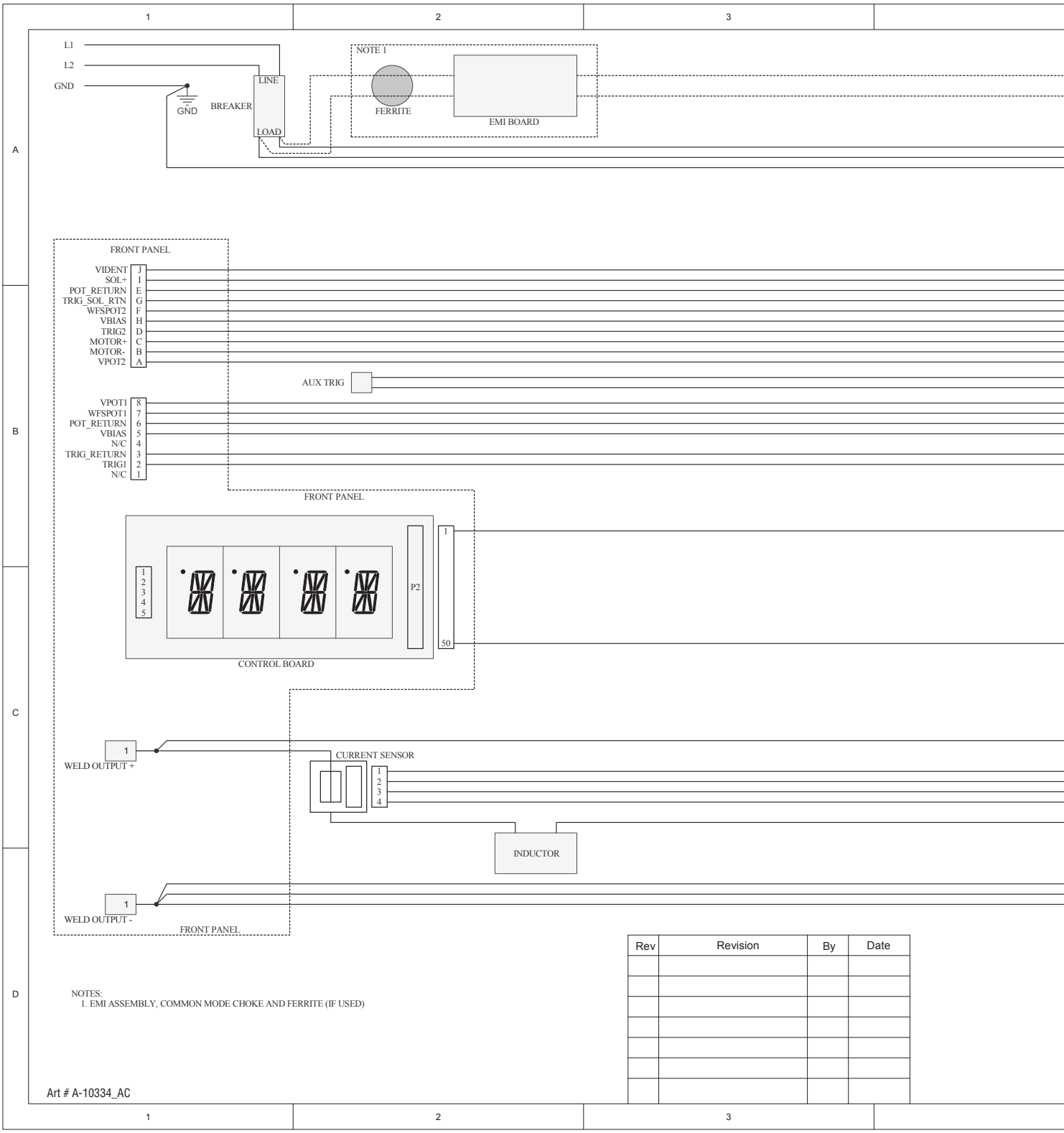

Rev	Revision	By	Date

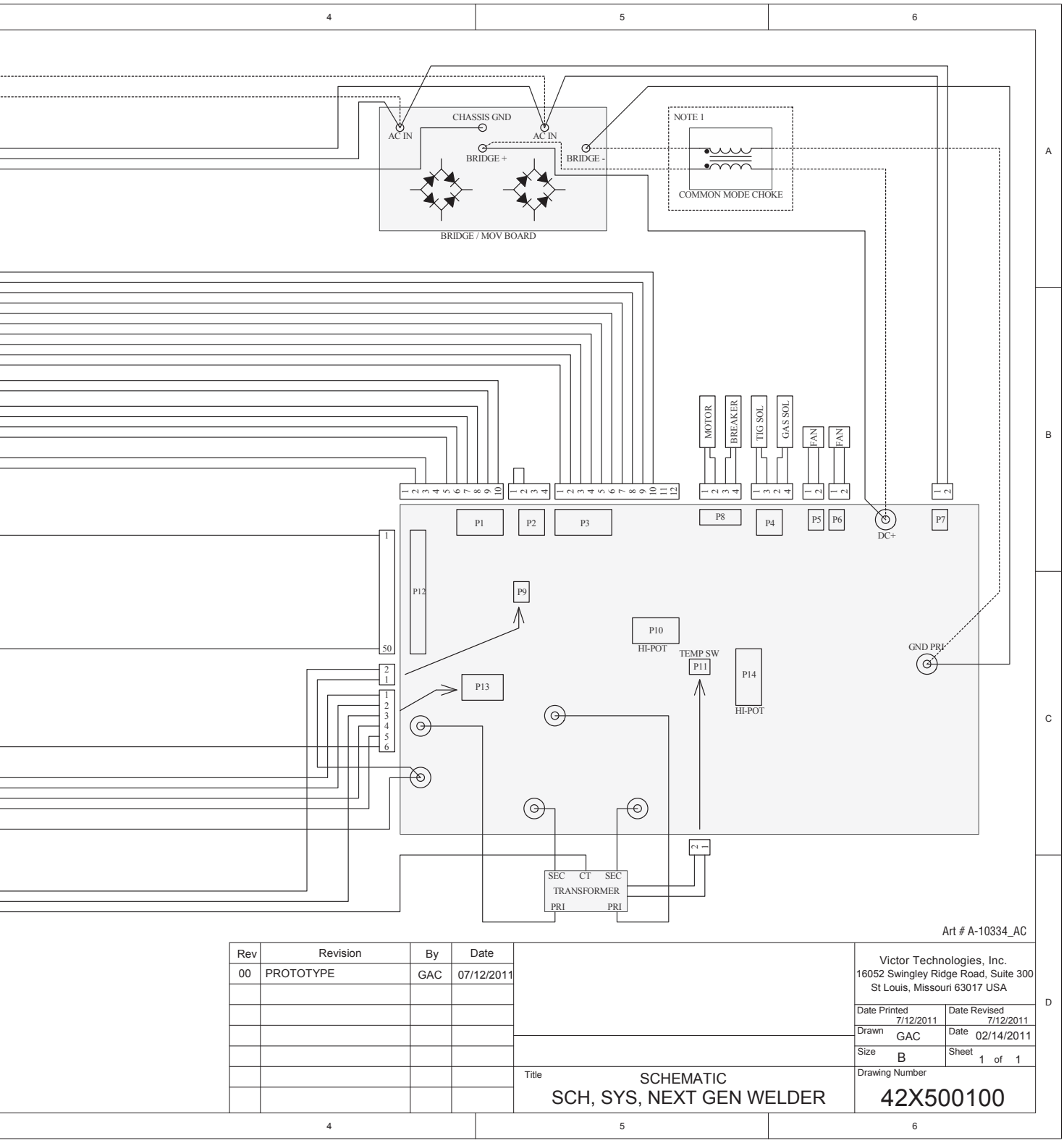

Rev	Revision	By	Date
00	PROTOTYPE	GAC	07/12/2011

Victor Technologies, Inc.
16052 Swingley Ridge Road, Suite 300
St Louis, Missouri 63017 USA

Date Printed 7/12/2011	Date Revised 7/12/2011
Drawn GAC	Date 02/14/2011
Size B	Sheet 1 of 1

Title
SCHEMATIC
SCH, SYS, NEXT GEN WELDER

Drawing Number
42X500100

REVISION HISTORY

Date	Rev	Description
09/01/2015	AA	Manual release

ESAB subsidiaries and representative offices

Europe

AUSTRIA
ESAB Ges.m.b.H
Vienna-Liesing
Tel: +43 1 888 25 11
Fax: +43 1 888 25 11 85

BELGIUM
S.A. ESAB N.V.
Heist-op-den-Berg
Tel: +32 70 233 075
Fax: +32 15 257 944

BULGARIA
ESAB Kft Representative Office
Sofia
Tel/Fax: +359 2 974 42 88

THE CZECH REPUBLIC
ESAB VAMBERK s.r.o.
Vamberk
Tel: +420 2 819 40 885
Fax: +420 2 819 40 120

DENMARK
Aktieselskabet ESAB
Herlev
Tel: +45 36 30 01 11
Fax: +45 36 30 40 03

FINLAND
ESAB Oy
Helsinki
Tel: +358 9 547 761
Fax: +358 9 547 77 71

FRANCE
ESAB France S.A.
Cergy Pontoise
Tel: +33 1 30 75 55 00
Fax: +33 1 30 75 55 24

GERMANY
ESAB GmbH
Solingen
Tel: +49 212 298 0
Fax: +49 212 298 218

GREAT BRITAIN
ESAB Group (UK) Ltd
Waltham Cross
Tel: +44 1992 76 85 15
Fax: +44 1992 71 58 03
ESAB Automation Ltd
Andover
Tel: +44 1264 33 22 33
Fax: +44 1264 33 20 74

HUNGARY
ESAB Kft
Budapest
Tel: +36 1 20 44 182
Fax: +36 1 20 44 186

ITALY
ESAB Saldatura S.p.A.
Bareggio (Mi)
Tel: +39 02 97 96 8.1
Fax: +39 02 97 96 87 01

THE NETHERLANDS
ESAB Nederland B.V.
Amersfoort
Tel: +31 33 422 35 55
Fax: +31 33 422 35 44

NORWAY
AS ESAB
Larvik
Tel: +47 33 12 10 00
Fax: +47 33 11 52 03

POLAND
ESAB Sp.zo.o.
Katowice
Tel: +48 32 351 11 00
Fax: +48 32 351 11 20

PORTUGAL
ESAB Lda
Lisbon
Tel: +351 8 310 960
Fax: +351 1 859 1277

ROMANIA
ESAB Romania Trading SRL
Bucharest
Tel: +40 316 900 600
Fax: +40 316 900 601

RUSSIA
LLC ESAB
Moscow
Tel: +7 (495) 663 20 08
Fax: +7 (495) 663 20 09

SLOVAKIA
ESAB Slovakia s.r.o.
Bratislava
Tel: +421 7 44 88 24 26
Fax: +421 7 44 88 87 41

SPAIN
ESAB Ibérica S.A.
Alcalá de Henares (MADRID)
Tel: +34 91 878 3600
Fax: +34 91 802 3461

SWEDEN
ESAB Sverige AB
Gothenburg
Tel: +46 31 50 95 00
Fax: +46 31 50 92 22
ESAB international AB
Gothenburg
Tel: +46 31 50 90 00
Fax: +46 31 50 93 60

SWITZERLAND
ESAB AG
Dietikon
Tel: +41 1 741 25 25
Fax: +41 1 740 30 55

UKRAINE
ESAB Ukraine LLC
Kiev
Tel: +38 (044) 501 23 24
Fax: +38 (044) 575 21 88

North and South America

ARGENTINA
CONARCO
Buenos Aires
Tel: +54 11 4 753 4039
Fax: +54 11 4 753 6313

BRAZIL
ESAB S.A.
Contagem-MG
Tel: +55 31 2191 4333
Fax: +55 31 2191 4440

CANADA
ESAB Group Canada Inc.
Missisauga, Ontario
Tel: +1 905 670 02 20
Fax: +1 905 670 48 79

MEXICO
ESAB Mexico S.A.
Monterrey
Tel: +52 8 350 5959
Fax: +52 8 350 7554

USA
ESAB Welding & Cutting Products
Florence, SC
Tel: +1 843 669 44 11
Fax: +1 843 664 57 48

Asia/Pacific

AUSTRALIA
ESAB South Pacific
Archerfield BC QLD 4108
Tel: +61 1300 372 228
Fax: +61 7 3711 2328

CHINA
Shanghai ESAB A/P
Shanghai
Tel: +86 21 2326 3000
Fax: +86 21 6566 6622

INDIA
ESAB India Ltd
Calcutta
Tel: +91 33 478 45 17
Fax: +91 33 468 18 80

INDONESIA
P.T. ESABindo Pratama
Jakarta
Tel: +62 21 460 0188
Fax: +62 21 461 2929

JAPAN
ESAB Japan
Tokyo
Tel: +81 45 670 7073
Fax: +81 45 670 7001

MALAYSIA
ESAB (Malaysia) Snd Bhd
USJ
Tel: +603 8023 7835
Fax: +603 8023 0225

SINGAPORE
ESAB Asia/Pacific Pte Ltd
Singapore
Tel: +65 6861 43 22
Fax: +65 6861 31 95

SOUTH KOREA
ESAB SeAH Corporation
Kyungnam
Tel: +82 55 269 8170
Fax: +82 55 289 8864

UNITED ARAB EMIRATES
ESAB Middle East FZE
Dubai
Tel: +971 4 887 21 11
Fax: +971 4 887 22 63

Africa

EGYPT
ESAB Egypt
Dokki-Cairo
Tel: +20 2 390 96 69
Fax: +20 2 393 32 13

SOUTH AFRICA
ESAB Africa Welding & Cutting Ltd
Durbanvill 7570 - Cape Town
Tel: +27 (0)21 975 8924

Distributors
For addresses and phone numbers to our distributors in other countries, please visit our home page
www.esab.eu

www.esab.eu

©2015, 2016 ESAB Welding and Cutting Products