THERMAL DYNAMICS®

42

CUTMASTER™

PLASMA CUTTING SYSTEM



Art # A-09347_AE

Operating Manual

Rev. AA **Date:** October 15, 2010 **Manual #** 0-5141

Operating Features:

40 AMP	DC	1 PHASE	120 VAC	230 VAC

WE APPRECIATE YOUR BUSINESS!

Congratulations on your new Thermal Dynamics product. We are proud to have you as our customer and will strive to provide you with the best service and reliability in the industry. This product is backed by our extensive warranty and world-wide service network. To locate your nearest distributor or service provider visit us on the web at **www.cigweld.com.au (Asia Pacific) www.thermal-dynamics.com (Americas and Europe).**

This Operating Manual has been designed to instruct you on the correct use and operation of your Thermal Dynamics product. Your satisfaction with this product and its safe operation is our ultimate concern. Therefore please take the time to read the entire manual, especially the Safety Precautions. They will help you to avoid potential hazards that may exist when working with this product.

YOU ARE IN GOOD COMPANY!

The Brand of Choice for Contractors and Fabricators Worldwide.
Thermal Dynamics is a Global Brand of manual and automation Plasma Cutting Products for Thermadyne Industries Inc.

We distinguish ourselves from our competition through market-leading, dependable products that have stood the test of time. We pride ourselves on technical innovation, competitive prices, excellent delivery, superior customer service and technical support, together with excellence in sales and marketing expertise.

Above all, we are committed to developing technologically advanced products to achieve a safer working environment within the welding industry.

WARNINGS

Read and understand this entire Manual and your employer's safety practices before installing, operating, or servicing the equipment.

While the information contained in this Manual represents the Manufacturer's best judgement, the Manufacturer assumes no liability for its use.

Plasma Cutting Power Supply
CutMaster™ 42
SL40 Torch™
Operating Manual Number 0-5141

Published by:
Thermal Dynamics Corporation
82 Benning Street
West Lebanon, New Hampshire, USA 03784
(603) 298-5711

www.thermal-dynamics.com

Copyright 2010 by
Thermadyne Corporation

All rights reserved.

Reproduction of this work, in whole or in part, without written permission of the publisher is prohibited.

The publisher does not assume and hereby disclaims any liability to any party for any loss or damage caused by any error or omission in this Manual, whether such error results from negligence, accident, or any other cause.

Printed in the United States of America

Publication Date: October 15, 2010

Record the following information for Warranty purposes:

Where Purchased:_____ _____

Purchase Date:_____ _____

Power Supply Serial #:_____ _____

Torch Serial #:_____ _____

TABLE OF CONTENTS

SECTION 1:GENERAL INFORMATION 1-1

1.01 Notes, Cautions and Warnings 1-1
1.02 Important Safety Precautions 1-1
1.03 Publications 1-3
1.04 Note, Attention et Avertissement 1-4
1.05 Precautions De Securite Importantes 1-4
1.06 Documents De Reference 1-6
1.07 Declaration of Conformity 1-7
1.08 Statement of Warranty 1-8

SECTION 2 SYSTEM:INTRODUCTION 2-1

2.01 Working Principle 2-1
2.02 Power Supply Specifications 2-1
2.03 Input Wiring Specifications 2-2
2.04 Power Supply Features 2-3

SECTION 2 TORCH:INTRODUCTION 2T-1

2T.01 Scope of Manual 2T-1
2T.02 Specifications 2T-1
2T.03 Introduction to Plasma 2T-2

SECTION 3 SYSTEM:INSTALLATION 3-1

3.01 Unpacking 3-1
3.02 Lifting Options 3-1
3.03 Primary Input Power Connections 3-2
3.04 Air Supply Connections 3-2

SECTION 4 SYSTEM:OPERATION 4-1

4.01 Control Panel 4-1
4.02 Preparations for Operating 4-2
4.03 Sequence of Operation 4-4
4.04 Cut Quality 4-6
4.05 General Cutting Information 4-7

SECTION 5 SYSTEM:SERVICE 5-1

5.01 General Maintenance 5-1
5.02 Basic Troubleshooting Guide 5-2

SECTION 5 TORCH:SERVICE 5T-1

5T.01 General Maintenance 5T-1
5T.02 Inspection and Replacement of Consumable Torch Parts 5T-1

SECTION 6:PARTS LISTS 6-1

6.01 Introduction 6-1
6.02 Power Supply Replacement Parts 6-2

APPENDIX 1:CIRCUIT DIAGRAM A-1

GLOBAL CUSTOMER SERVICE CONTACT INFORMATION ..... Rear Cover

SECTION 1: GENERAL INFORMATION

1.01 Notes, Cautions and Warnings

Throughout this manual, notes, cautions, and warnings are used to highlight important information. These highlights are categorized as follows:

NOTE

An operation, procedure, or background information which requires additional emphasis or is helpful in efficient operation of the system.

CAUTION

A procedure which, if not properly followed, may cause damage to the equipment.

WARNING

A procedure which, if not properly followed, may cause injury to the operator or others in the operating area.

1.02 Important Safety Precautions

WARNING

OPERATION AND MAINTENANCE OF PLASMA ARC EQUIPMENT CAN BE DANGEROUS AND HAZARDOUS TO YOUR HEALTH.

Plasma arc cutting produces intense electric and magnetic emissions that may interfere with the proper function of cardiac pacemakers, hearing aids, or other electronic health equipment. Persons who work near plasma arc cutting applications should consult their medical health professional and the manufacturer of the health equipment to determine whether a hazard exists.

To prevent possible injury, read, understand and follow all warnings, safety precautions and instructions before using the equipment. Call 1-603-298-5711 or your local distributor if you have any questions.

GASES AND FUMES

Gases and fumes produced during the plasma cutting process can be dangerous and hazardous to your health.

- Keep all fumes and gases from the breathing area. Keep your head out of the welding fume plume.
- Use an air-supplied respirator if ventilation is not adequate to remove all fumes and gases.
- The kinds of fumes and gases from the plasma arc depend on the kind of metal being used, coatings on the metal, and the different processes. You must be very careful when cutting or welding any metals which may contain one or more of the following:

Antimony	Chromium	Mercury
Arsenic	Cobalt	Nickel
Barium	Copper	Selenium
Beryllium	Lead	Silver
Cadmium	Manganese	Vanadium

- Always read the Material Safety Data Sheets (MSDS) that should be supplied with the material you are using. These MSDSs will give you the information regarding the kind and amount of fumes and gases that may be dangerous to your health.
- For information on how to test for fumes and gases in your workplace, refer to item 1 in Subsection 1.03, Publications in this manual.
- Use special equipment, such as water or down draft cutting tables, to capture fumes and gases.
- Do not use the plasma torch in an area where combustible or explosive gases or materials are located.
- Phosgene, a toxic gas, is generated from the vapors of chlorinated solvents and cleansers. Remove all sources of these vapors.
- This product, when used for welding or cutting, produces fumes or gases which contain chemicals known to the State of California to cause birth defects and, in some cases, cancer. (California Health & Safety Code Sec. 25249.5 et seq.)

ELECTRIC SHOCK

Electric Shock can injure or kill. The plasma arc process uses and produces high voltage electrical energy. This electric energy can cause severe or fatal shock to the operator or others in the workplace.

- Never touch any parts that are electrically “live” or “hot.”
- Wear dry gloves and clothing. Insulate yourself from the work piece or other parts of the welding circuit.
- Repair or replace all worn or damaged parts.
- Extra care must be taken when the workplace is moist or damp.
- Install and maintain equipment according to NEC code, refer to item 9 in Subsection 1.03, Publications.
- Disconnect power source before performing any service or repairs.
- Read and follow all the instructions in the Operating Manual.

FIRE AND EXPLOSION

Fire and explosion can be caused by hot slag, sparks, or the plasma arc.

- Be sure there is no combustible or flammable material in the workplace. Any material that cannot be removed must be protected.
- Ventilate all flammable or explosive vapors from the workplace.
- Do not cut or weld on containers that may have held combustibles.

- Provide a fire watch when working in an area where fire hazards may exist.
- Hydrogen gas may be formed and trapped under aluminum workpieces when they are cut underwater or while using a water table. DO NOT cut aluminum alloys underwater or on a water table unless the hydrogen gas can be eliminated or dissipated. Trapped hydrogen gas that is ignited will cause an explosion.



NOISE

Noise can cause permanent hearing loss. Plasma arc processes can cause noise levels to exceed safe limits. You must protect your ears from loud noise to prevent permanent loss of hearing.

- To protect your hearing from loud noise, wear protective ear plugs and/or ear muffs. Protect others in the workplace.
- Noise levels should be measured to be sure the decibels (sound) do not exceed safe levels.
- For information on how to test for noise, see item 1 in Subsection 1.03, Publications, in this manual.



PLASMA ARC RAYS

Plasma Arc Rays can injure your eyes and burn your skin. The plasma arc process produces very bright ultra violet and infrared light. These arc rays will damage your eyes and burn your skin if you are not properly protected.

- To protect your eyes, always wear a welding helmet or shield. Also always wear safety glasses with side shields, goggles or other protective eye wear.
- Wear welding gloves and suitable clothing to protect your skin from the arc rays and sparks.
- Keep helmet and safety glasses in good condition. Replace lenses when cracked, chipped or dirty.
- Protect others in the work area from the arc rays. Use protective booths, screens or shields.
- Use the shade of lens as suggested in the following per ANSI/ASC Z49.1:

Arc Current	Minimum Protective Shade No.	Suggested Shade No.
Less Than 300*	8	9
300 - 400*	9	12
400 - 800*	10	14

**These values apply where the actual arc is clearly seen. Experience has shown that lighter filters may be used when the arc is hidden by the workpiece.*



LEAD WARNING

This product contains chemicals, including lead, or otherwise produces chemicals known to the State of California to cause cancer, birth defects and other reproductive harm. Wash hands after handling. (California Health & Safety Code § 25249.5 et seq.)

Eye protection filter shade selector for welding or cutting (goggles or helmet), from AWS A6.2-73.

Welding or Cutting Operation	Electrode Size Metal Thickness	Filter Shade	Welding or Cutting Operation	Electrode Size Metal Thickness	Filter Shade
Torch soldering		2	**Gas metal-arc welding (MIG)**		
Torch brazing		3 or 4	Non-ferrous base metal	All	11
Oxygen Cutting			Non-ferrous base metal	All	12
Light	Under 1 in., 25 mm	3 or 4	Gas tungsten arc welding	All	12
Medium	1 to 6 in., 25-150 mm	4 or 5	**(TIG)**	All	12
Heavy	Over 6 in., 150 mm	5 or 6	Atomic hydrogen welding	All	12
Gas welding			Carbon arc welding	All	12
Light	Under 1/8 in., 3 mm	4 or 5	Plasma arc welding		
Medium	1/8 to 1/2 in., 3-12 mm	5 or 6	**Carbon arc air gouging**		
Heavy	Over 1/2 in., 12 mm	6 or 8	Light		12
Shielded metal-arc welding (stick) electrodes	Under 5/32 in., 4 mm	10	Heavy		14
	5/32 to 1/4 in., 4 to 6.4 mm	12	**Plasma arc cutting**		
	Over 1/4 in., 6.4 mm	14	Light	Under 300 Amp	9
			Medium	300 to 400 Amp	12
			Heavy	Over 400 Amp	14

Table 1-1

1.03 Publications

Refer to the following standards or their latest revisions for more information:

1. OSHA, SAFETY AND HEALTH STANDARDS, 29CFR 1910, obtainable from the Superintendent of Documents, U.S. Government Printing Office, Washington, D.C. 20402
2. ANSI Standard Z49.1, SAFETY IN WELDING AND CUTTING, obtainable from the American Welding Society, 550 N.W. LeJeune Rd, Miami, FL 33126
3. NIOSH, SAFETY AND HEALTH IN ARC WELDING AND GAS WELDING AND CUTTING, obtainable from the Superintendent of Documents, U.S. Government Printing Office, Washington, D.C. 20402
4. ANSI Standard Z87.1, SAFE PRACTICES FOR OCCUPATION AND EDUCATIONAL EYE AND FACE PROTECTION, obtainable from American National Standards Institute, 1430 Broadway, New York, NY 10018
5. ANSI Standard Z41.1, STANDARD FOR MEN'S SAFETY-TOE FOOTWEAR, obtainable from the American National Standards Institute, 1430 Broadway, New York, NY 10018
6. ANSI Standard Z49.2, FIRE PREVENTION IN THE USE OF CUTTING AND WELDING PROCESSES, obtainable from American National Standards Institute, 1430 Broadway, New York, NY 10018
7. AWS Standard A6.0, WELDING AND CUTTING CONTAINERS WHICH HAVE HELD COMBUSTIBLES, obtainable from American Welding Society, 550 N.W. LeJeune Rd, Miami, FL 33126
8. NFPA Standard 51, OXYGEN-FUEL GAS SYSTEMS FOR WELDING, CUTTING AND ALLIED PROCESSES, obtainable from the National Fire Protection Association, Batterymarch Park, Quincy, MA 02269
9. NFPA Standard 70, NATIONAL ELECTRICAL CODE, obtainable from the National Fire Protection Association, Batterymarch Park, Quincy, MA 02269
10. NFPA Standard 51B, CUTTING AND WELDING PROCESSES, obtainable from the National Fire Protection Association, Batterymarch Park, Quincy, MA 02269
11. CGA Pamphlet P-1, SAFE HANDLING OF COMPRESSED GASES IN CYLINDERS, obtainable from the Compressed Gas Association, 1235 Jefferson Davis Highway, Suite 501, Arlington, VA 22202
12. CSA Standard W117.2, CODE FOR SAFETY IN WELDING AND CUTTING, obtainable from the Canadian Standards Association, Standards Sales, 178 Rexdale Boulevard, Rexdale, Ontario, Canada M9W 1R3
13. NWSA booklet, WELDING SAFETY BIBLIOGRAPHY obtainable from the National Welding Supply Association, 1900 Arch Street, Philadelphia, PA 19103
14. American Welding Society Standard AWSF4.1, RECOMMENDED SAFE PRACTICES FOR THE PREPARATION FOR WELDING AND CUTTING OF CONTAINERS AND PIPING THAT HAVE HELD HAZARDOUS SUBSTANCES, obtainable from the American Welding Society, 550 N.W. LeJeune Rd, Miami, FL 33126
15. ANSI Standard Z88.2, PRACTICE FOR RESPIRATORY PROTECTION, obtainable from American National Standards Institute, 1430 Broadway, New York, NY 10018

1.04 Note, Attention et Avertissement

Dans ce manuel, les mots “note,” “attention,” et “avertissement” sont utilisés pour mettre en relief des informations à caractère important. Ces mises en relief sont classifiées comme suit :

NOTE

Toute opération, procédure ou renseignement général sur lequel il importe d’insister davantage ou qui contribue à l’efficacité de fonctionnement du système.



ATTENTION

Toute procédure pouvant résulter l’endommagement du matériel en cas de non-respect de la procédure en question.



AVERTISSEMENT

Toute procédure pouvant provoquer des blessures de l’opérateur ou des autres personnes se trouvant dans la zone de travail en cas de non-respect de la procédure en question.

1.05 Precautions De Securite Importantes



AVERTISSEMENTS

L’OPÉRATION ET LA MAINTENANCE DU MATÉRIEL DE SOUDAGE À L’ARC AU JET DE PLASMA PEUVENT PRÉSENTER DES RISQUES ET DES DANGERS DE SANTÉ.

Coupant à l’arc au jet de plasma produit de l’énergie électrique haute tension et des émissions magnétique qui peuvent interférer la fonction propre d’un “pacemaker” cardiaque, les appareils auditif, ou autre matériel de santé electronique. Ceux qui travail près d’une application à l’arc au jet de plasma devrait consulter leur membre professionel de médication et le manufacturier de matériel de santé pour déterminer s’il existe des risques de santé.

Il faut communiquer aux opérateurs et au personnel TOUS les dangers possibles. Afin d’éviter les blessures possibles, lisez, comprenez et suivez tous les avertissements, toutes les précautions de sécurité et toutes les consignes avant d’utiliser le matériel. Composez le + 603-298-5711 ou votre distributeur local si vous avez des questions.



FUMÉE et GAZ

La fumée et les gaz produits par le procédé de jet de plasma peuvent présenter des risques et des dangers de santé.

- Eloignez toute fumée et gaz de votre zone de respiration. Gardez votre tête hors de la plume de fumée provenant du chalumeau.
- Utilisez un appareil respiratoire à alimentation en air si l’aération fournie ne permet pas d’éliminer la fumée et les gaz.
- Les sortes de gaz et de fumée provenant de l’arc de plasma dépendent du genre de métal utilisé, des revêtements se trouvant sur le métal et des différents procédés. Vous devez prendre soin lorsque vous coupez ou soudez tout métal pouvant contenir un ou plusieurs des éléments suivants:

antimoine	cadmium	mercure
argent	chrome	nickel
arsenic	cobalt	plomb
baryum	cuivre	sélénium
béryllium	manganèse	vanadium

- Lisez toujours les fiches de données sur la sécurité des matières (sigle américain “MSDS”); celles-ci devraient être fournies avec le matériel que vous utilisez. Les MSDS contiennent des renseignements quant à la quantité et la nature de la fumée et des gaz pouvant poser des dangers de santé.
- Pour des informations sur la manière de tester la fumée et les gaz de votre lieu de travail, consultez l’article 1 et les documents cités à la page 5.
- Utilisez un équipement spécial tel que des tables de coupe à débit d’eau ou à courant descendant pour capter la fumée et les gaz.
- N’utilisez pas le chalumeau au jet de plasma dans une zone où se trouvent des matières ou des gaz combustibles ou explosifs.
- Le phosgène, un gaz toxique, est généré par la fumée provenant des solvants et des produits de nettoyage chlorés. Eliminez toute source de telle fumée.
- Ce produit, dans le procéder de soudage et de coupe, produit de la fumée ou des gaz pouvant contenir des éléments reconnu dans L’état de la Californie, qui peuvent causer des défauts de naissance et le cancer. (La sécurité de santé en Californie et la code sécurité Sec. 25249.5 et seq.)



CHOC ELECTRIQUE

Les chocs électriques peuvent blesser ou même tuer. Le procédé au jet de plasma requiert et produit de l’énergie électrique haute tension. Cette énergie électrique peut produire des chocs graves, voire mortels, pour l’opérateur et les autres personnes sur le lieu de travail.

- Ne touchez jamais une pièce “sous tension” ou “vive”; portez des gants et des vêtements secs. Isolez-vous de la pièce de travail ou des autres parties du circuit de soudage.
- Réparez ou remplacez toute pièce usée ou endommagée.
- Prenez des soins particuliers lorsque la zone de travail est humide ou moite.
- Montez et maintenez le matériel conformément au Code électrique national des Etats-Unis. (Voir la page *5,* article 9.)
- Débranchez l’alimentation électrique avant tout travail d’entretien ou de réparation.
- Lisez et respectez toutes les consignes du Manuel de consignes.



INCENDIE ET EXPLOSION

Les incendies et les explosions peuvent résulter des scories chaudes, des étincelles ou de l'arc de plasma. Le procédé à l'arc de plasma produit du métal, des étincelles, des scories chaudes pouvant mettre le feu aux matières combustibles ou provoquer l'explosion de fumées inflammables.

- Soyez certain qu'aucune matière combustible ou inflammable ne se trouve sur le lieu de travail. Protégez toute telle matière qu'il est impossible de retirer de la zone de travail.
- Procurez une bonne aération de toutes les fumées inflammables ou explosives.
- Ne coupez pas et ne soudez pas les conteneurs ayant pu renfermer des matières combustibles.
- Prévoyez une veille d'incendie lors de tout travail dans une zone présentant des dangers d'incendie.
- Le gas hydrogène peut se former ou s'accumuler sous les pièces de travail en aluminium lorsqu'elles sont coupées sous l'eau ou sur une table d'eau. NE PAS couper les alliages en aluminium sous l'eau ou sur une table d'eau à moins que le gas hydrogène peut s'échapper ou se dissiper. Le gas hydrogène accumulé explosera si enflammé.



RAYONS D'ARC DE PLASMA

Les rayons provenant de l'arc de plasma peuvent blesser vos yeux et brûler votre peau. Le procédé à l'arc de plasma produit une lumière infra-rouge et des rayons ultra-violets très forts. Ces rayons d'arc nuiront à vos yeux et brûleront votre peau si vous ne vous protégez pas correctement.

- Pour protéger vos yeux, portez toujours un casque ou un écran de soudeur. Portez toujours des lunettes de sécurité munies de parois latérales ou des lunettes de protection ou une autre sorte de protection oculaire.
- Portez des gants de soudeur et un vêtement protecteur approprié pour protéger votre peau contre les étincelles et les rayons de l'arc.
- Maintenez votre casque et vos lunettes de protection en bon état. Remplacez toute lentille sale ou comportant fissure ou rognure.
- Protégez les autres personnes se trouvant sur la zone de travail contre les rayons de l'arc en fournissant des cabines ou des écrans de protection.
- Utilisez la nuance de lentille qui est suggèrée dans le recommendation qui suivent ANSI/ASC Z49.1:

Courant Arc	Nuance Minimum Protective Numéro	Nuance Suggerée Numéro
Moins de 300*	8	9
300 - 400*	9	12
400 - 800*	10	14

** Ces valeurs s'appliquent ou l'arc actuel est observé clairement. L'experience a démontrer que les filtres moins foncés peuvent être utilisés quand l'arc est caché par moiceau de travail.*



BRUIT

Le bruit peut provoquer une perte permanente de l'ouïe. Les procédés de soudage à l'arc de plasma peuvent provoquer des niveaux sonores supérieurs aux limites normalement acceptables. Vous dú4ez vous protéger les oreilles contre les bruits forts afin d'éviter une perte permanente de l'ouïe.

- Pour protéger votre ouïe contre les bruits forts, portez des tampons protecteurs et/ou des protections auriculaires. Protégez également les autres personnes se trouvant sur le lieu de travail.
- Il faut mesurer les niveaux sonores afin d'assurer que les décibels (le bruit) ne dépassent pas les niveaux sûrs.
- Pour des renseignements sur la manière de tester le bruit, consultez l'article 1, page 5.



PLOMB AVERTISSEMENT

Ce produit contient des produits chimiques, comme le plomb, ou engendre des produits chimiques, reconnus par l'état de Californie comme pouvant être à l'origine de cancer, de malformations fœtales ou d'autres problèmes de reproduction. **Il faut se laver les mains après toute manipulation.** (Code de Californie de la sécurité et santé, paragraphe 25249.5 et suivants)

1.06 Documents De Reference

Consultez les normes suivantes ou les révisions les plus récentes ayant été faites à celles-ci pour de plus amples renseignements :

1. OSHA, NORMES DE SÉCURITÉ DU TRAVAIL ET DE PROTECTION DE LA SANTÉ, 29CFR 1910, disponible auprès du Superintendent of Documents, U.S. Government Printing Office, Washington, D.C. 20402
2. Norme ANSI Z49.1, LA SÉCURITÉ DES OPÉRATIONS DE COUPE ET DE SOUDAGE, disponible auprès de la Société Américaine de Soudage (American Welding Society), 550 N.W. LeJeune Rd., Miami, FL 33126
3. NIOSH, LA SÉCURITÉ ET LA SANTÉ LORS DES OPÉRATIONS DE COUPE ET DE SOUDAGE À L'ARC ET AU GAZ, disponible auprès du Superintendent of Documents, U.S. Government Printing Office, Washington, D.C. 20402
4. Norme ANSI Z87.1, PRATIQUES SURES POUR LA PROTECTION DES YEUX ET DU VISAGE AU TRAVAIL ET DANS LES ECOLES, disponible de l'Institut Américain des Normes Nationales (American National Standards Institute), 1430 Broadway, New York, NY 10018
5. Norme ANSI Z41.1, NORMES POUR LES CHAUSSURES PROTECTRICES, disponible auprès de l'American National Standards Institute, 1430 Broadway, New York, NY 10018
6. Norme ANSI Z49.2, PRÉVENTION DES INCENDIES LORS DE L' EMPLOI DE PROCÉDÉS DE COUPE ET DE SOUDAGE, disponible auprès de l'American National Standards Institute, 1430 Broadway, New York, NY 10018
7. Norme A6.0 de l'Association Américaine du Soudage (AWS), LE SOUDAGE ET LA COUPE DE CONTENEURS AYANT RENFERMÉ DES PRODUITS COMBUSTIBLES, disponible auprès de la American Welding Society, 550 N.W. LeJeune Rd., Miami, FL 33126
8. Norme 51 de l'Association Américaine pour la Protection contre les Incendies (NFPA), LES SYSTEMES À GAZ AVEC ALIMENTATION EN OXYGENE POUR LE SOUDAGE, LA COUPE ET LES PROCÉDÉS ASSOCIÉS, disponible auprès de la National Fire Protection Association, Batterymarch Park, Quincy, MA 02269
9. Norme 70 de la NFPA, CODE ELECTRIQUE NATIONAL, disponible auprès de la National Fire Protection Association, Batterymarch Park, Quincy, MA 02269
10. Norme 51B de la NFPA, LES PROCÉDÉS DE COUPE ET DE SOUDAGE, disponible auprès de la National Fire Protection Association, Batterymarch Park, Quincy, MA 02269
11. Brochure GCA P-1, LA MANIPULATION SANS RISQUE DES GAZ COMPRIMÉS EN CYLINDRES, disponible auprès de l' Association des Gaz Comprimés (Compressed Gas Association), 1235 Jefferson Davis Highway, Suite 501, Arlington, VA 22202
12. Norme CSA W117.2, CODE DE SÉCURITÉ POUR LE SOUDAGE ET LA COUPE, disponible auprès de l'Association des Normes Canadiennes, Standards Sales, 178 Rexdale Boulevard, Rexdale, Ontario, Canada, M9W 1R3
13. Livret NWSA, BIBLIOGRAPHIE SUR LA SÉCURITÉ DU SOUDAGE, disponible auprès de l'Association Nationale de Fournitures de Soudage (National Welding Supply Association), 1900 Arch Street, Philadelphia, PA 19103
14. Norme AWSF4.1 de l'Association Américaine de Soudage, RECOMMANDATIONS DE PRATIQUES SURES POUR LA PRÉPARATION À LA COUPE ET AU SOUDAGE DE CONTENEURS ET TUYAUX AYANT RENFERMÉ DES PRODUITS DANGEREUX , disponible auprès de la American Welding Society, 550 N.W. LeJeune Rd., Miami, FL 33126
15. Norme ANSI Z88.2, PRATIQUES DE PROTECTION RESPIRATOIRE, disponible auprès de l'American National Standards Institute, 1430 Broadway, New York, NY 10018

1.07 Declaration of Conformity

Manufacturer: Thermadyne Company
Address: 82 Benning Street
West Lebanon, New Hampshire 03784
USA

The equipment described in this manual conforms to all applicable aspects and regulations of the 'Low Voltage Directive' (European Council Directive 73/23/EEC as amended by Council Directive 93/68/EEC) and to the National legislation for the enforcement of this Directive.

The equipment described in this manual conforms to all applicable aspects and regulations of the "EMC Directive" (European Council Directive 89/336/EEC) and to the National legislation for the enforcement of this Directive.

Serial numbers are unique with each individual piece of equipment and details description, parts used to manufacture a unit and date of manufacture.

National Standard and Technical Specifications

The product is designed and manufactured to a number of standards and technical requirements. Among them are:

* CSA (Canadian Standards Association) standard C22.2 number 60 for Arc welding equipment.

* UL (Underwriters Laboratory) rating 94VO flammability testing for all printed-circuit boards used.

* CENELEC EN50199 EMC Product Standard for Arc Welding Equipment.

* ISO/IEC 60974-1 (BS 638-PT10) (EN 60 974-1) (EN50192) (EN50078) applicable to plasma cutting equipment and associated accessories.

* AS60974.1 Arc Welding Equipment Welding Power Sources.

For environments with increased hazard of electrical shock, Power Supplies bearing the S mark conform to EN50192 when used in conjunction with hand torches with exposed cutting tips, if equipped with properly installed standoff guides.

* Extensive product design verification is conducted at the manufacturing facility as part of the routine design and manufacturing process. This is to ensure the product is safe, when used according to instructions in this manual and related industry standards, and performs as specified. Rigorous testing is incorporated into the manufacturing process to ensure the manufactured product meets or exceeds all design specifications.

Thermadyne has been manufacturing products for more than 30 years, and will continue to achieve excellence in our area of manufacture.

Manufacturers responsible representative in Europe: Steve Ward
Operations Director
Thermadyne Europe
Europa Building
Chorley N Industrial Park
Chorley, Lancashire,
England PR6 7BX

1.08 Statement of Warranty

LIMITED WARRANTY: Subject to the terms and conditions established below, Thermadyne Company warrants to the original retail purchaser that new Thermal Dynamics CUTMASTER® plasma cutting systems sold after the effective date of this warranty are free of defects in material and workmanship. Should any failure to conform to this warranty appear within the applicable period stated below, Thermadyne Company shall, upon notification thereof and substantiation that the product has been stored operated and maintained in accordance with Thermadyne's specifications, instructions, recommendations and recognized industry practice, correct such defects by suitable repair or replacement.

This warranty is exclusive and in lieu of any warranty of merchantability or fitness for a particular purpose.

Thermadyne will repair or replace, at its discretion, any warranted parts or components that fail due to defects in material or workmanship within the time periods set out below. Thermadyne Company must be notified within 30 days of any failure, at which time Thermadyne Company will provide instructions on the warranty procedures to be implemented.

Thermadyne Company will honor warranty claims submitted within the warranty periods listed below. All warranty periods begin on the date of sale of the product to the original retail customer or 1 year after sale to an authorized Thermadyne Distributor.

LIMITED WARRANTY PERIOD

Product	Power Supply Components (Parts and Labor)	Torch and Leads (Parts and Labor)
CUTMASTER 42	4 Year	1 Year

This warranty does not apply to:

1. Consumable Parts, such as tips, electrodes, shield cups, o - rings, starter cartridges, gas distributors, fuses, filters.

2. Equipment that has been modified by an unauthorized party, improperly installed, improperly operated or misused based upon industry standards.

In the event of a claim under this warranty, the remedies shall be, at the discretion of Thermadyne Company:

1. Repair of the defective product.
2. Replacement of the defective product.
3. Reimbursement of reasonable costs of repair when authorized in advance by Thermadyne.
4. Payment of credit up to the purchase price less reasonable depreciation based on actual use.

These remedies may be authorized by Thermadyne and are FOB West Lebanon, NH or an authorized Thermadyne service station. Product returned for service is at the owner's expense and no reimbursement of travel or transportation is authorized.

LIMITATION OF LIABILITY: Thermadyne Company shall not under any circumstances be liable for special or consequential damages such as, but not limited to, damage or loss of purchased or replacement goods or claims of customer of distributors (hereinafter "Purchaser") for service interruption. The remedies of the Purchaser set forth herein are exclusive and the liability of Thermadyne with respect to any contract, or anything done in connection therewith such as the performance or breach thereof, or from the manufacture, sale, delivery, resale, or use of the goods covered by or furnished by Thermadyne whether arising out of contract, negligence, strict tort, or under any warranty, or otherwise, shall not, except as expressly provided herein, exceed the price of the goods upon which liability is based.

This warranty becomes invalid if replacement parts or accessories are used which may impair the safety or performance of any Thermadyne product.

This warranty is invalid if the Thermal Dynamics product is sold by non - authorized persons.

Effective October 15, 2010

SECTION 2 SYSTEM: INTRODUCTION

2.01 Working Principle

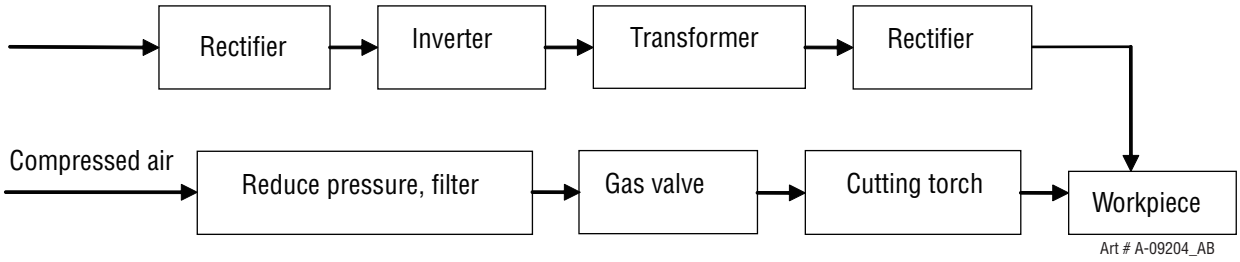

2.02 Power Supply Specifications

CUTMASTER 42 Power Supply Specifications	
Input Power	120 VAC (+-10%), 1Phase, 50/60Hz 208-230 VAC (+-10%), 1Phase, 50/60Hz
Output Current	20 Amps @ 120VAC, 15A 20-27 Amps @ 120VAC, 20A 20-40 Amps @ 230VAC, 20A
CUTMASTER 42 Power Supply Duty Cycle (Note 1)	
Ambient Temperature	104° F (40° C)
Duty Cycle	30% @ 120VAC, 40% @ 230VAC
Rated Current	27 Amps @ 120VAC, 40 Amps @ 230V
SL40 Torch Gas Requirements (see section 2T.03)	
Notes	
1. Duty Cycle is the percentage of time the system can be operated without overheating. Duty cycle is reduced if primary input voltage (AC) is low or the DC voltage is higher than shown in this chart.	
2. Air supply must be free of oil, moisture, and other contaminants. Excessive oil and moisture may cause double-arcing, rapid tip wear, or even complete torch failure. Contaminants may cause poor cutting performance and rapid electrode wear. Optional filters provide increased filtering capabilities.	

NOTE

IEC Rating is determined as specified by the International Electro-Technical Commission. These specifications include calculating an output voltage based upon power supply rated current. To facilitate comparison between power supplies, all manufacturers use this output voltage to determine duty cycle.

TDC Rating is determined using an output voltage representative of actual output voltage during cutting with a TDC torch. This voltage may be more or less than IEC voltage, depending upon choice of torch, consumables, and actual cutting operation.

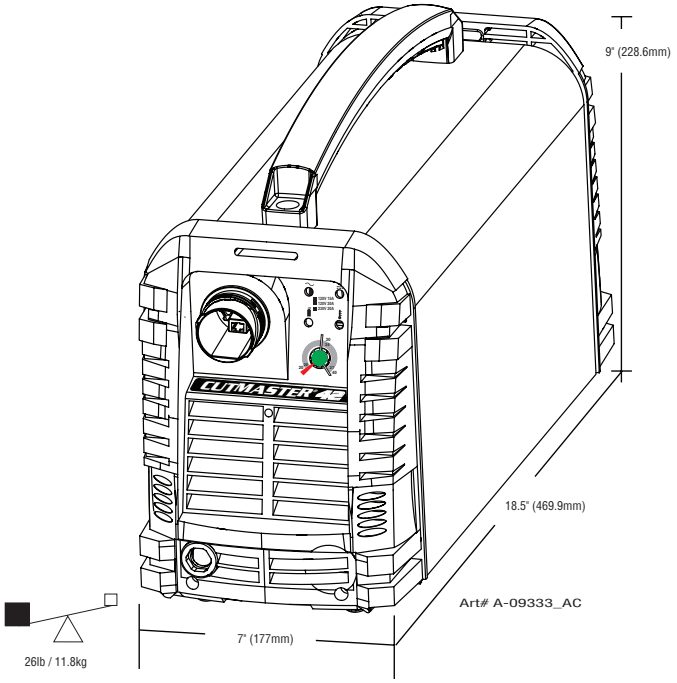

Figure 2-1 Power Supply Dimensions & Weight

NOTE

Weight includes torch & leads, input power cord, and work cable with clamp.

CAUTION

Provide clearance for proper air flow through the power supply. Operation without proper air flow will inhibit proper cooling and reduce duty cycle.

2.03 Input Wiring Specifications

CUTMASTER 42 Input Power Requirements					
Input		Power Input	Current Input	Current Input	Suggested Sizes (See Note)
Voltage	Freq.	(kVA)	Max (Amps)	Ieff (Amps)	Fuse (Amps)
(Volts-AC)	(Hz)	1-Ph	1-Ph	1-Ph	1-Ph
120	50/60	3.3	27.5	15	25
208	50/60	5.0	24	15.4	23
230	50/60	5.0	21.4	13.5	20
240	50/60	5.0	20.8	13	20
Line Voltages with Suggested Circuit Protection					
Motor start fuses or thermal circuit breakers are recommended for this application. Check local requirements for your situation in this regard.					

NOTE

Refer to Local and National Codes or local authority having jurisdiction for proper wiring requirements. Cable size is de-rated based on the Duty Cycle of the equipment.

The suggested sizes are based on flexible power cable with power plug installations.

Cable conductor temperature used is 167° F (75° C).

2.04 Power Supply Features

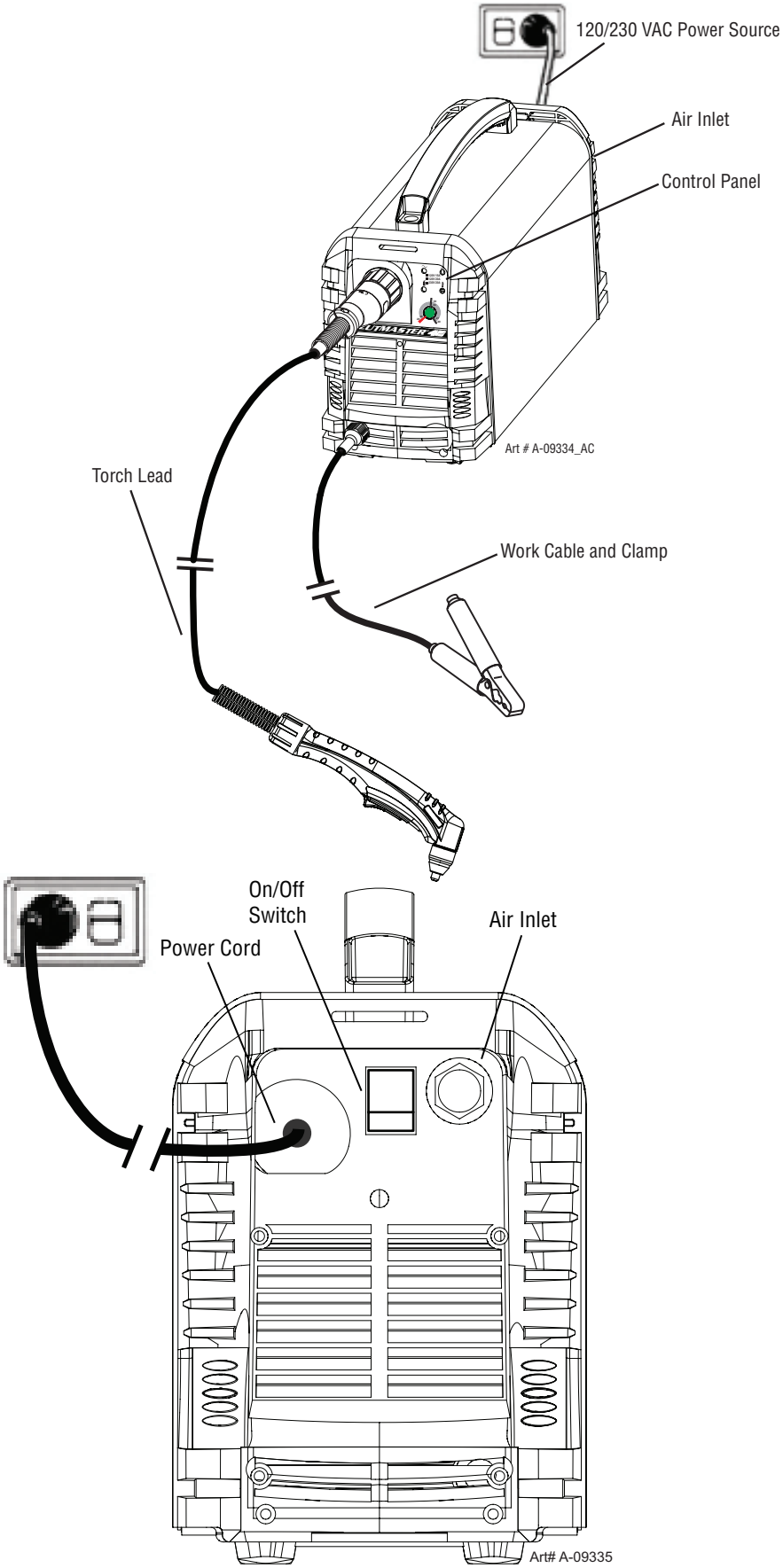

This Page left blank intentionally.

SECTION 2TORCH: INTRODUCTION

2T.01 Scope of Manual

This manual contains descriptions, operating instructions and maintenance procedures for the SL40 Plasma Cutting Torch. Service of this equipment is restricted to properly trained personnel; unqualified personnel are strictly cautioned against attempting repairs or adjustments not covered in this manual, at the risk of voiding the Warranty. Read this manual thoroughly. A complete understanding of the characteristics and capabilities of this equipment will assure the dependable operation for which it was designed.

2T.02 Specifications

A. Torch Configurations

1. Hand Torch, Model SL40

The hand torch head is at 75° to the torch handle. The hand torches include a torch handle and torch trigger assembly.

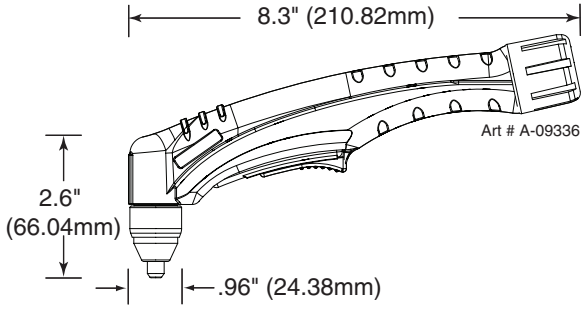

B. Torch Leads Lengths

Hand Torches are available as follows:

- 15 ft / 4.6 m.

C. Torch Parts

Starter Cartridge, Electrode, Tip, Shield Cup

D. Parts - In - Place (PIP)

Torch has built-in switch.

12 vdc circuit rating

E. Type Cooling

Combination of ambient air and gas stream through torch.

F. Torch Ratings

SL40 Torch Ratings	
Ambient Temperature	104° F 40° C
Duty Cycle	100% @ 40 Amps @ 250 scfh
Maximum Current	40 Amps
Voltage (V_{peak})	500V
Arc Striking Voltage	500V

G. Current Ratings

SL40 Current Ratings	
SL40 Torch & Leads	Up to 40 Amps, DC, Straight Polarity

NOTE

Power Supply characteristics will determine material thickness range.

H. Gas Requirements

SL40 Torch Gas Specifications	
Gas (Plasma and Secondary)	Compressed Air
Minimum Input Pressure	85 psi 5.9 bar
Maximum Input Pressure	125 psi / 8.6 bar
Gas Flow	193 scfh 91 lpm

WARNING

This torch is not to be used with oxygen (O_2). This torch is not to be use with high frequency starting systems.

2T.03 Introduction to Plasma

A. Plasma Gas Flow

Plasma is a gas which has been heated to an extremely high temperature and ionized so that it becomes electrically conductive. The plasma arc cutting and gouging processes use this plasma to transfer an electrical arc to the workpiece. The metal to be cut or removed is melted by the heat of the arc and then blown away.

While the goal of plasma arc cutting is separation of the material, plasma arc gouging is used to remove metals to a controlled depth and width.

In a Plasma Cutting Torch a cool gas enters Zone B, where a arc between the electrode and the torch tip heats and ionizes the gas. The main cutting arc then transfers to the workpiece through the column of plasma gas in Zone C.

By forcing the plasma gas and electric arc through a small orifice, the torch delivers a high concentration of heat to a small area. The stiff, constricted plasma arc is shown in Zone C. Direct current (DC) straight polarity is used for plasma cutting, as shown in the illustration.

Zone A channels a secondary gas that cools the torch. This gas also assists the high velocity plasma gas in blowing the molten metal out of the cut allowing for a fast, slag - free cut.

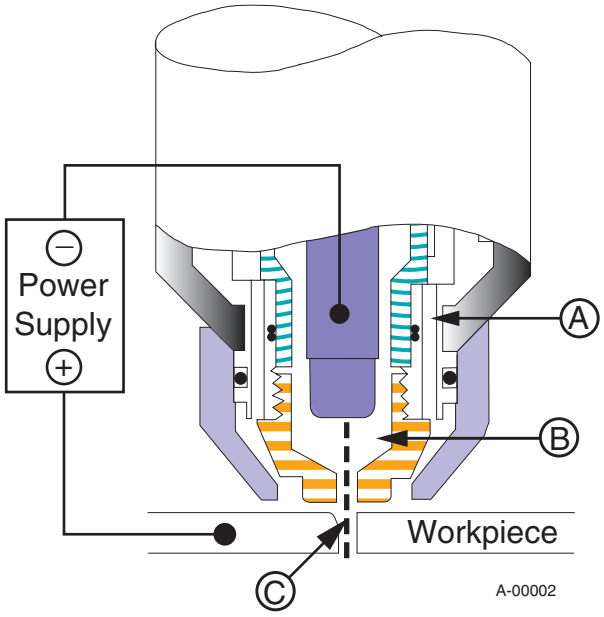

Typical Torch Head Detail

B. Gas Distribution

The single gas used is internally split into plasma and secondary gases.

The plasma gas flows into the torch through the negative lead, through the starter cartridge, around the electrode, and out through the tip orifice.

The secondary gas flows down around the outside of the torch starter cartridge, and out between the tip and shield cup around the plasma arc.

C. Pilot Arc

When the torch is started a pilot arc is established between the electrode and cutting tip. This pilot arc creates a path for the main arc to transfer to the work.

D. Main Cutting Arc

DC power is also used for the main cutting arc. The negative output is connected to the torch electrode through the torch lead. The positive output is connected to the workpiece via the work cable and to the torch through a pilot wire.

E. Parts - In - Place (PIP)

The torch includes a 'Parts - In - Place' (PIP) circuit. When the shield cup is properly installed, it closes a switch. The torch will not operate if this switch is open.

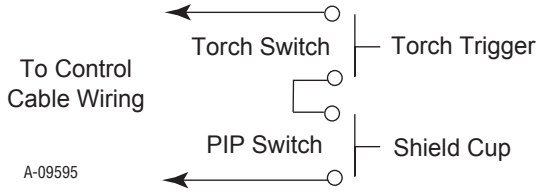

Parts - In - Place Circuit Diagram for Hand Torch

SECTION 3: INSTALLATION

3.01 Unpacking

1. Use the packing lists to identify and account for each item.

   A. Contents List

Description	Quantity
CM42 Power source	1
10ft power input cable (installed)	1
120VAC Adapter Pigtail 15A	1
120VAC Adapter Pigtail 20A	1
Work cable and clamp (installed)	1
SL40 Torch (15ft(4.6m)) w/consumables	1
Carry case	1
40A Tip Drag	2
20A Tip Drag	2
40A Tip, Standoff	2
Electrode	2
Gloves	1
Cutting Glasses	1

2. Inspect each item for possible shipping damage. If damage is evident, contact your distributor and / or shipping company before proceeding with the installation.
3. Record Power Supply and Torch model and serial numbers, purchase date and vendor name, in the information block at the front of this manual.

3.02 Lifting Options

The Power Supply includes a handle for **hand lifting only.** Be sure unit is lifted and transported safely and securely.

WARNING

Do not touch live electrical parts.

Disconnect input power cord before moving unit.

FALLING EQUIPMENT can cause serious personal injury and can damage equipment.

HANDLE is not for mechanical lifting.

- *Only persons of adequate physical strength should lift the unit.*
- *Lift unit by the handle, using two hands. Do not use straps for lifting.*
- *Use optional cart or similar device of adequate capacity to move unit.*
- *Place unit on a proper skid and secure in place before transporting with a fork lift or other vehicle.*

3.03 Primary Input Power Connections

Power Cords Included With Power Supply

Attached to the power supply is an input power cord with a 230 Volt 50 Amp NEMA 6-50P for plug. Supplied adapters allow for connection of the power supply input cable plug for when using 120V input power.

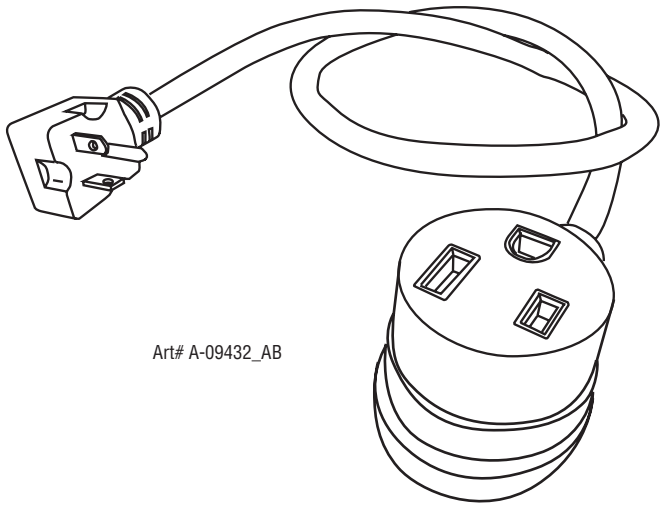

Figure 3-1 120VAC Adapter Pigtail

CAUTION

Check your power source for correct voltage before plugging in or connecting the unit. The primary power source, fuse, and any extension cords used must conform to local electrical code and the recommended circuit protection and wiring requirements as specified in Section 2.

Input Voltage (VAC)	Rated Output	Amps (RMS) input at rated output, 60 Hz, single-phase	kVA
120V, 15A Circuit	20A, 88V	20.4	2.5
120V, 20A Circuit	27A, 91V	28.5	3.5
120V, 30A Circuit	27A, 91V	28.5	3.5
208-230V, 20A Circuit	40A, 96V	23-21.4	4.8

3.04 Air Supply Connections

A. Connecting Air Supply to Unit

The connection is the same for compressed air or industrial compressed air in gas cylinders.

1. Connect the gas line to the compressed air inlet port at the appropriate pressure.

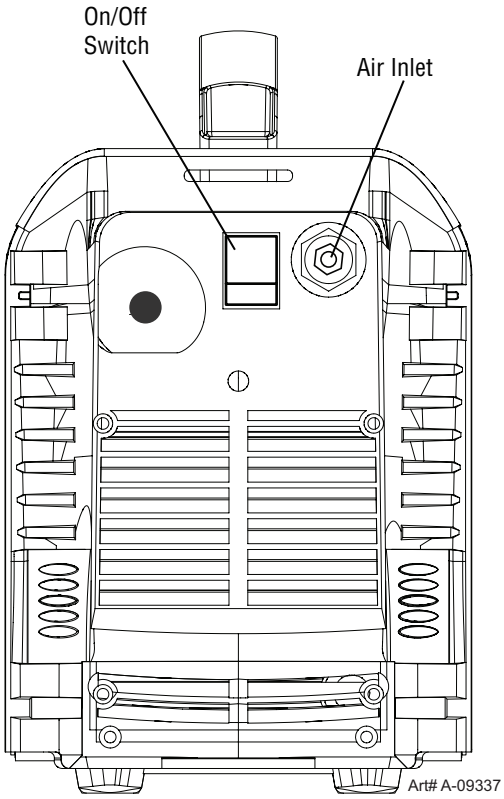

Figure 3-2 Gas Connection to Compressed Air input

B. Using Industrial Compressed Air In Gas Cylinders

When using Industrial compressed air in gas cylinders as the gas supply:

1. Refer to the manufacturer's specifications for installation and maintenance procedures for high pressure gas regulators.
2. Examine the cylinder valves to be sure they are clean and free of oil, grease or any foreign material. Briefly open each cylinder valve to blow out any dust which may be present.
3. The cylinder must be equipped with an adjustable high - pressure regulator capable of outlet pressures up to 100 psi (6.9 bar) maximum and flows of at least 250 scfh (120 lpm).
4. Connect gas supply hose to the cylinder.

NOTE

Pressure should be set at 100 psi (6.9 bar) at the high pressure gas cylinder regulator.

Supply hose must be at least 1/4 inch (6 mm) I.D.

For a secure seal, apply thread sealant to the fitting threads, according to manufacturer's instructions. Do Not use Teflon tape as a thread sealer, as small particles of the tape may break off and block the small gas passages in the torch.

This page left blank intentionally.

SECTION 4 SYSTEM: OPERATION

4.01 Control Panel

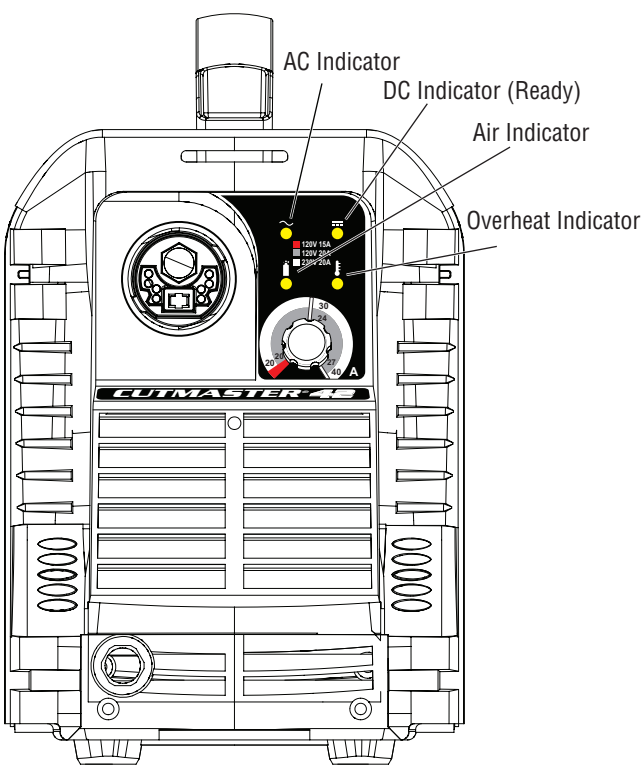

The Front Panel

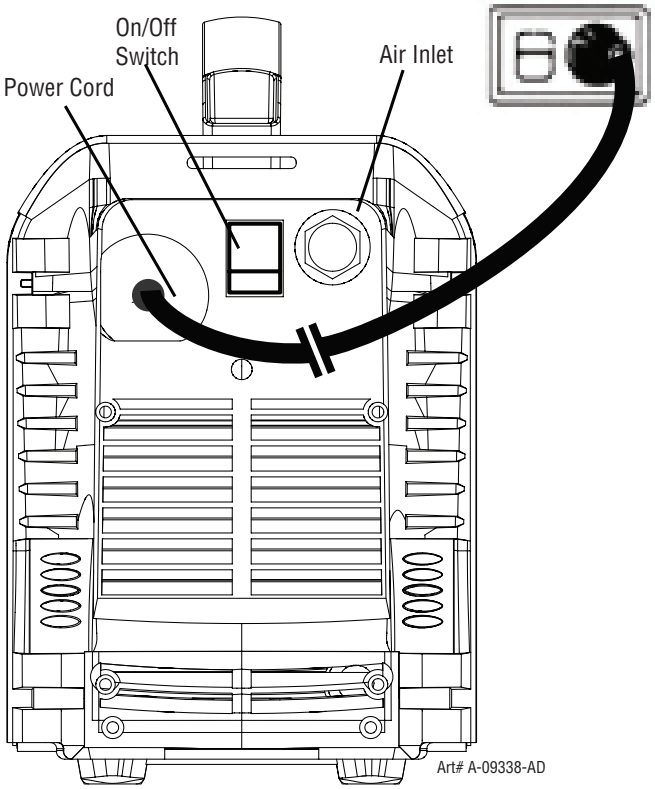

The Rear Panel

1. ON / OFF Switch (Power Switch/Lamp)

Controls input power to the power supply. I is ON (Red Lamp), O is OFF.

2. (A) Output Current Control

Sets the desired output current. If the overload protection (fuse or circuit breaker) on the input power circuit opens frequently, either reduce cutting output, reduce the cutting time, or connect the unit to more adequate input power. Note: For 120V input power, the unit will automatically limit the output current to a maximum of 27A. For 230V input power, the maximum output is 40 Amps. Refer to Section 2 for input power requirements.

3. ~ AC Indicator

Steady light indicates power supply is ready for operation.

4. OVERHEAT Indicator (TEMP Indicator)

Indicator is normally OFF. Indicator is ON when internal temperature exceeds normal limits. Allow the unit to run with the fan on until the temp indicator turns off.

5. AIR Indicator

AIR light should be ON when there is sufficient gas pressure.

6. ⎓ READY (DC Indicator)

Indicator is ON when DC output circuit is active.

NOTE

All consumables must be correctly installed and maintained to ensure correct operation.

4.02 Preparations For Operating

At the start of each operating session:

WARNING

Disconnect primary power at the source before assembling or disassembling power supply, torch parts, or torch and leads assemblies.

A. Torch Parts Selection

Check the torch for proper assembly and appropriate torch parts. The torch parts must correspond with the type of operation, and with the amperage output of this power supply (40 amps maximum). Use only genuine Thermal Dynamics parts with this torch.

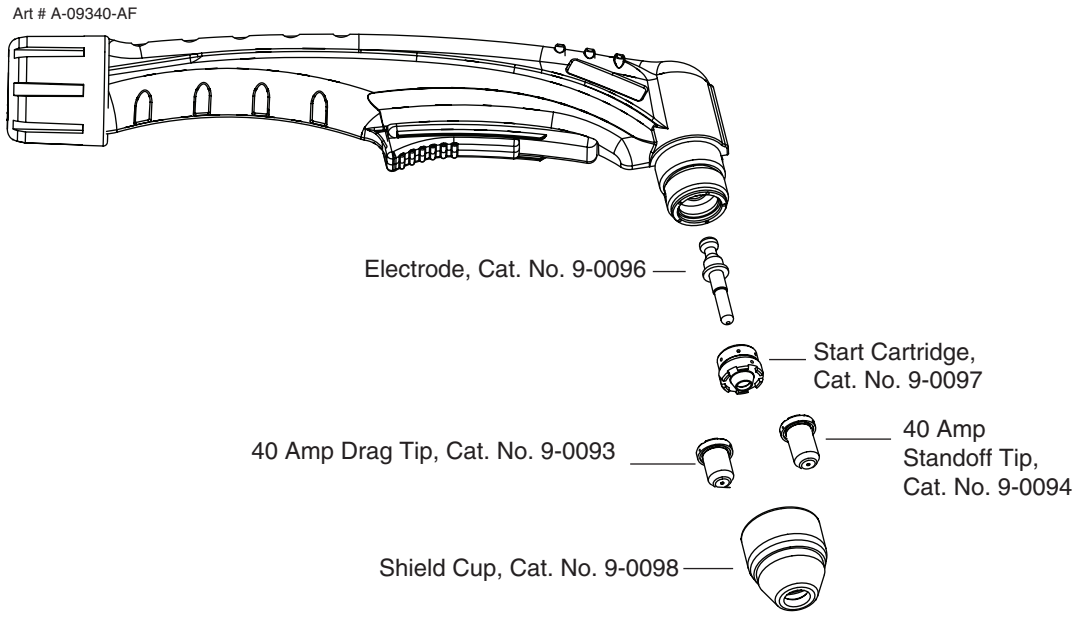

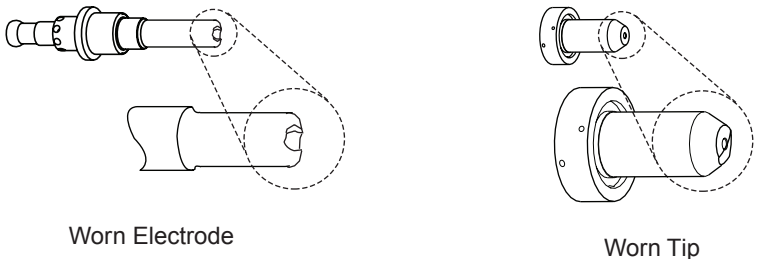

Worn Electrode

Worn Tip

NOTE

When operating the torch in a normal condition, some gas vents through the gap between the shield cup and torch handle. Do not attempt to over tighten the shield cup as irreparable damage to internal components may result.

B. Torch Connection

Check that the torch is properly connected.

C. Check Primary Input Power Source

1. Check the power source for proper input voltage. Make sure the input power source meets the power requirements for the unit per Section 2, Specifications.
2. Connect the input power cable (or close the main disconnect switch) to supply power to the system.

D. Gas Selection

Ensure gas source meets requirements listed in section 2T. Check connections and turn gas supply on.

E. Connect Work Cable

Clamp the work cable to the workpiece or cutting table. The area must be free from oil, paint and rust. Connect only to the main part of the workpiece; do not connect to the part to be cut off.

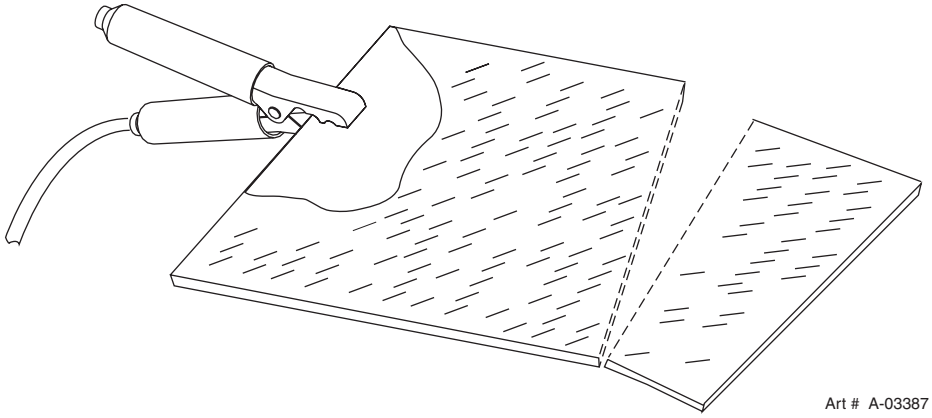

F. Power On

Place the power supply ON / OFF switch to the ON (I) position. Power indicator ~ turns on.

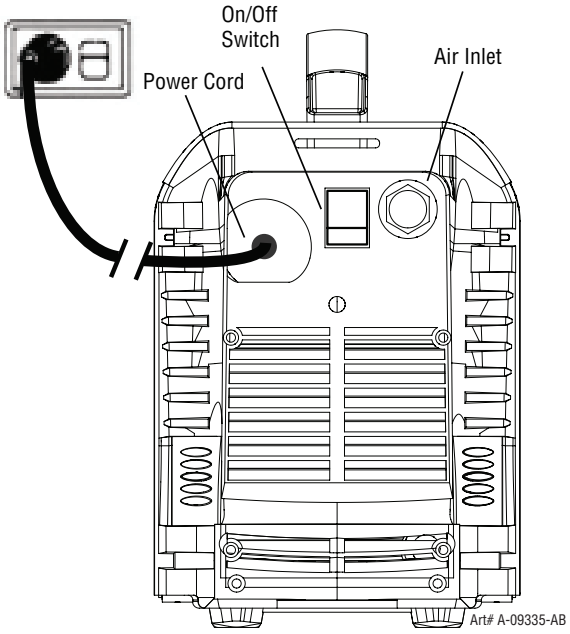

Rear Panel with ON/OFF Switch

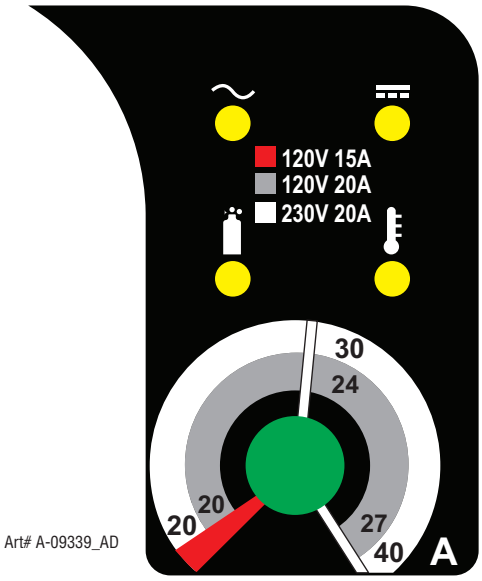

Front Panel With Power ON/OFF Indicator

G. Select Current Output Level

Set the desired current output level.

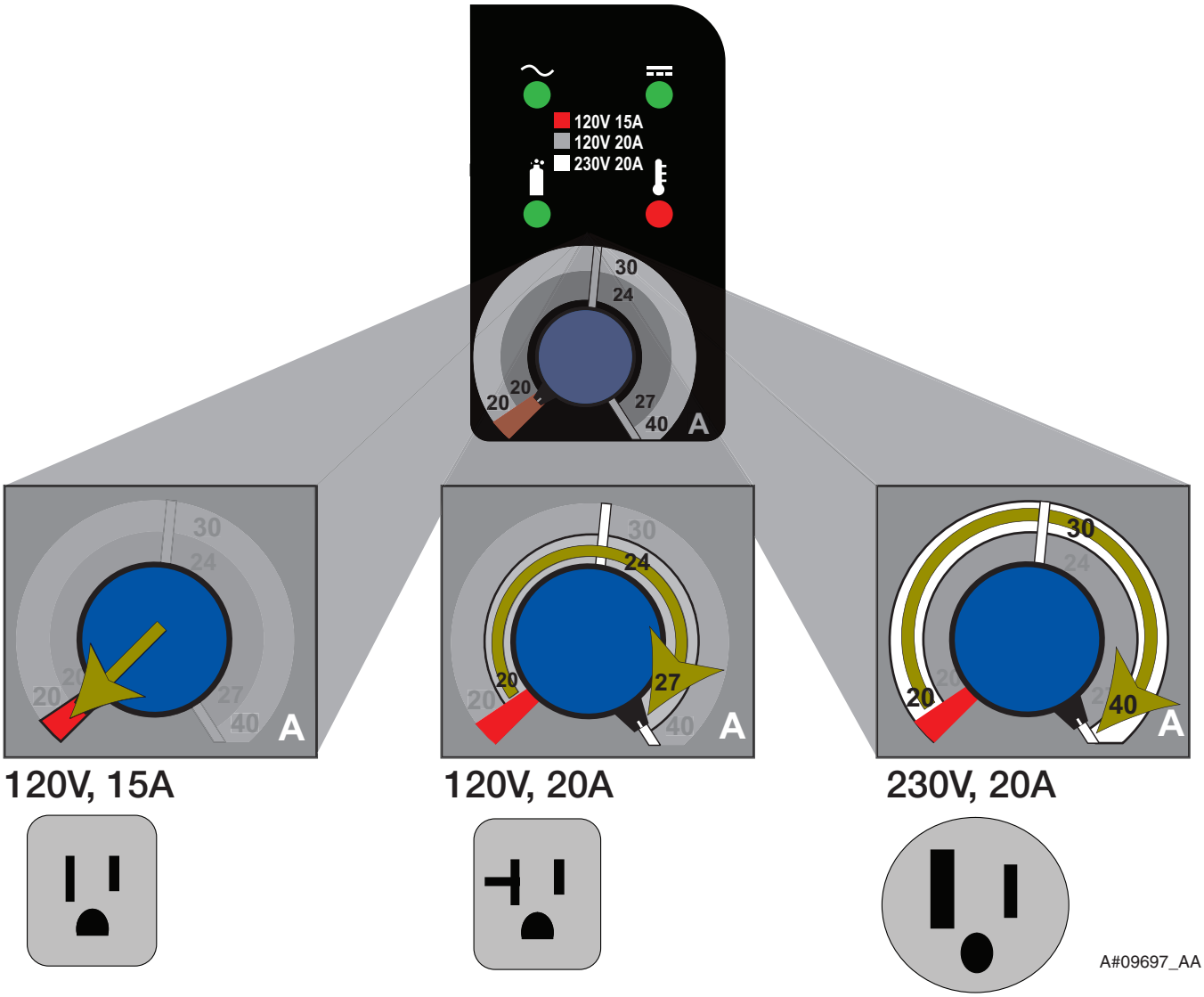

4.03 Sequence of Operation

The following is a typical sequence of operation for this power supply.

1. Place the ON / OFF switch on the power supply to ON (up) position (Red indicator lamp is illuminated).
   a. AC indicator ~ turns on; fan turns on.

NOTE

During initial power up, there will be a delay of about 2 seconds before the AC Indicator light will illuminate and the pre-flow gas and fan starts. The gas will automatically flow from torch for approximately 10 seconds (only after the AC Indicator lamp is illuminated) (The AC Indicator lamp and fan turns on approximately 2 seconds after the ON/OFF switch is enabled), this is a process that makes sure all inputs (gas, input power, torch connection, and torch parts) are acknowledged for proper operation.

2. Wear protective clothing, including welding gloves and appropriate eye protection (see table 1-1). Place tip on work piece and pull trigger. Arc will initiate and start cutting material.

- **Standoff Cutting With Hand Torch**

NOTE

For best performance and parts life, always use the correct parts for the type of operation.

A. The torch can be comfortably held in one hand or steadied with two hands. Position the hand to press the Trigger on the torch handle. With the hand torch, the hand may be positioned close to the torch head for maximum control or near the back end for maximum heat protection. Choose the holding technique that feels most comfortable and allows good control and movement.

NOTE

The tip should never come in contact with the workpiece except during drag cutting operations.

B. Depending on the cutting operation, do one of the following:

a). For drag cutting, place the tip on the plate holding the torch at a angle to the plate so that only one edge of the tip is in contact with the plate. This prevents damage to the tip during the piercing process.

b). For standoff cutting, hold the torch tip on the work piece, pull the trigger. After the arc is initiated lift the tip to 1/8" - 3/8" (3-4mm) off the work.

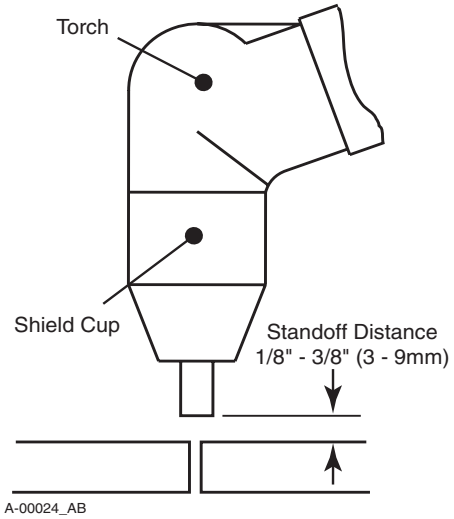

Standoff Distance

Art # A-09342

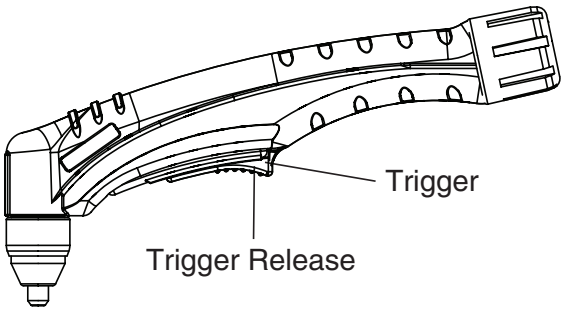

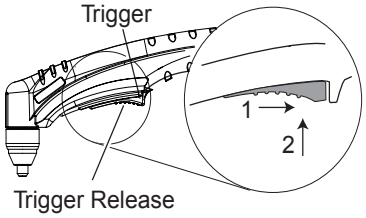

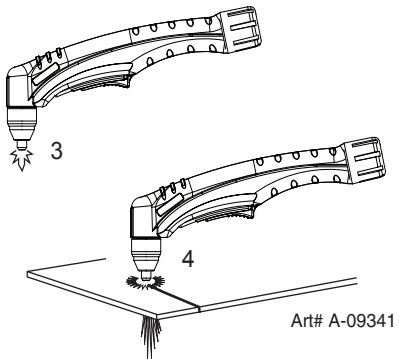

NOTE

When the shield cup is properly installed, there is a slight gap between the shield cup and the torch handle. Gas vents through this gap as part of normal operation. Do not attempt to force the shield cup to close this gap. Forcing the shield cup against the torch head or torch handle can damage components.

- **Drag Cutting With a Hand Torch**
  Drag cutting works best on metal 1/4"(6 mm) thick or less.

NOTE

For best parts performance and life, always use the correct parts for the type of operation.

A. Install the drag cutting tip and set the output current.

B. The torch can be comfortably held in one hand or steadied with two hands. Position the hand to press the Trigger on the torch handle. With the hand torch, the hand may be positioned close to the torch head for maximum control or near the back end for maximum heat protection. Choose the holding technique that feels most comfortable and allows good control and movement.
C. Keep the torch in contact with the workpiece during the cutting cycle.
D. Hold the torch away from your body.
E. Slide the trigger release toward the back of the torch handle while simultaneously squeezing the trigger. The arc will start.

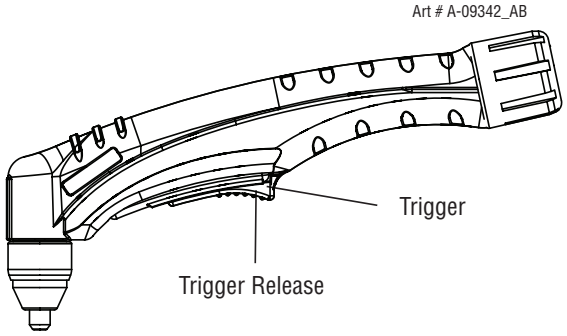

F. Place the torch tip on the work. The main arc will transfer to the work.

NOTE

The gas preflow and postflow are a characteristic of the power supply and not a function of the torch.

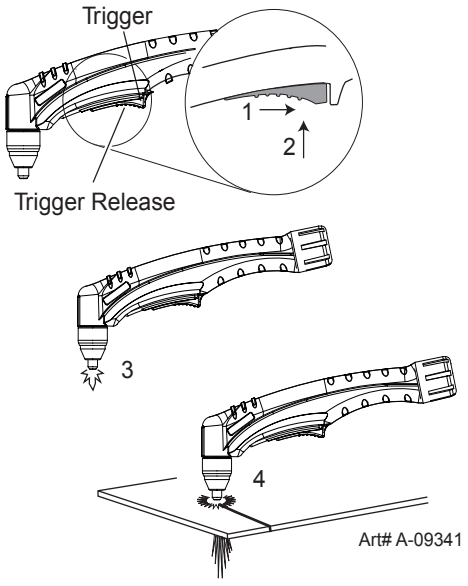

G. Cut as usual. Simply release the trigger assembly to stop cutting.
H. Follow normal recommended cutting practices as provided herein.
3. Complete cutting operation.

NOTE

If the torch is lifted too far from the workpiece while cutting, the main arc will stop and the pilot arc will automatically restart.

4. Release the torch trigger.
   a. Main arc stops.
5. Set the power supply ON / OFF switch to OFF (down position).
   a. AC indicator ~ turns OFF.
6. Set the main power disconnect to OFF, or unplug input power cord.
   a. Input power is removed from the system.

4.04 Cut Quality

NOTE

Cut quality depends heavily on setup and parameters such as torch standoff, alignment with the workpiece, cutting speed, gas pressures, and operator ability.

Refer to appendix pages for additional information as related to the power supply used.

Cut quality requirements differ depending on application. For instance, nitride build-up and bevel angle may be major factors when the surface will be welded after cutting. Dross-free cutting is important when finish cut quality is desired to avoid a secondary cleaning operation. The following cut quality characteristics are illustrated in the following figure:

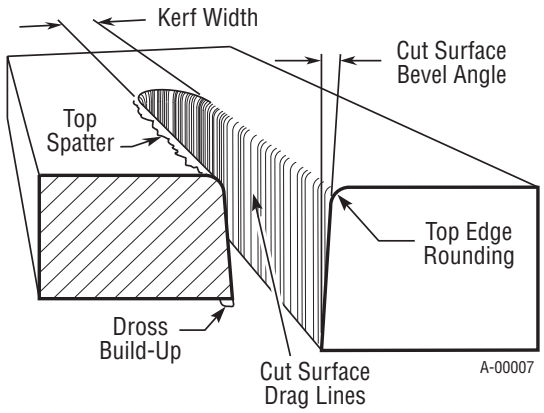

Cut Quality Characteristics

Cut Surface

The desired or specified condition (smooth or rough) of the face of the cut.

Nitride Build - Up

Nitride deposits can be left on the surface of the cut when nitrogen is present in the plasma gas stream. These buildups may create difficulties if the material is to be welded after the cutting process.

Bevel Angle

The angle between the surface of the cut edge and a plane perpendicular to the surface of the plate. A perfectly perpendicular cut would result in a 0° bevel angle.

Top - Edge Rounding

Rounding on the top edge of a cut due to wearing from the initial contact of the plasma arc on the workpiece.

Bottom Dross Buildup

Molten material which is not blown out of the cut area and resolidifies on the plate. Excessive dross may require secondary cleanup operations after cutting.

Kerf Width

The width of the cut (or the width of material removed during the cut).

Top Spatter (Dross)

Top spatter or dross on the top of the cut caused by slow travel speed, excess cutting height, or cutting tip whose orifice has become elongated.

4.05 General Cutting Information

WARNING

Disconnect primary power at the source before disassembling the power supply, torch, or torch leads.

Frequently review the Important Safety Precautions at the front of this manual. Be sure the operator is equipped with proper gloves, clothing, eye and ear protection. Make sure no part of the operator's body comes into contact with the workpiece while the torch is activated.\

CAUTION

Sparks from the cutting process can cause damage to coated, painted, and other surfaces such as glass, plastic and metal.

NOTE

Handle torch leads with care and protect them from damage.

Torch Standoff

Improper standoff (the distance between the torch tip and workpiece) can adversely affect tip life as well as shield cup life. Standoff may also significantly affect the bevel angle. Reducing standoff will generally result in a more square cut.

Edge Starting

For edge starts, hold the torch perpendicular to the workpiece with the front of the tip near (not touching) the edge of the workpiece at the point where the cut is to start. When starting at the edge of the plate, do not pause at the edge and force the arc to "reach" for the edge of the metal. Establish the cutting arc as quickly as possible.

Direction of Cut

In the torches, the plasma gas stream swirls as it leaves the torch to maintain a smooth column of gas. This swirl effect results in one side of a cut being more square than the other. Viewed along the direction of travel, the right side of the cut is more square than the left.

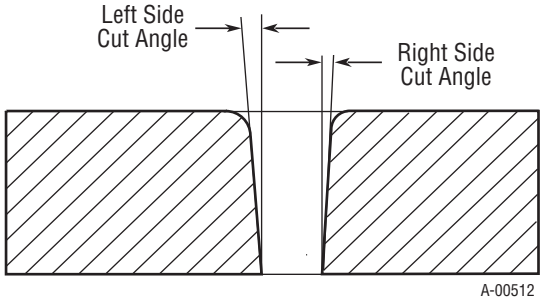

Side Characteristics Of Cut

To make a square - edged cut along an inside diameter of a circle, the torch should move counterclockwise around the circle. To keep the square edge along an outside diameter cut, the torch should travel in a clockwise direction.

Dross

When dross is present on carbon steel, it is commonly referred to as either “high speed, slow speed, or top dross”. Dross present on top of the plate is normally caused by too great a torch to plate distance. "Top dross" is normally very easy to remove and can often be wiped off with a welding glove. "Slow speed dross" is normally present on the bottom edge of the plate. It can vary from a light to heavy bead, but does not adhere tightly to the cut edge, and can be easily scraped off. "High speed dross" usually forms a narrow bead along the bottom of the cut edge and is very difficult to remove. When cutting a troublesome steel, it is sometimes useful to reduce the cutting speed to produce "slow speed dross". Any resultant cleanup can be accomplished by scraping, not grinding.

SECTION 5 SYSTEM: SERVICE

5.01 General Maintenance

Warning!

There are extremely dangerous voltage and power levels present inside this product. Do not attempt to open or repair unless you are a qualified electrical tradesperson and you have had training in power measurements and troubleshooting techniques. If major complex subassemblies are faulty, then the Cutting Power Source must be returned to an Accredited Thermal Dynamics Service Provider for repair.

Maintain more often if used under severe conditions

Each Use

Visual check of torch tip and electrode

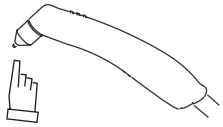

Weekly

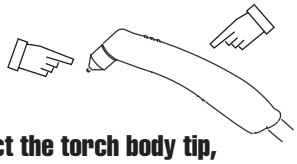

Visually inspect the torch body tip, electrode, start cartridge and shield cup

Visually inspect the cables and leads. Replace as needed

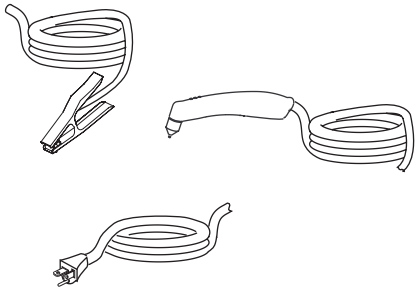

3 Months

Replace all broken parts

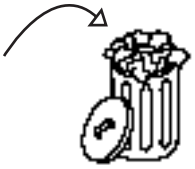

Clean exterior of power supply

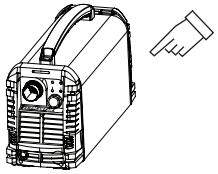

6 Months



Visually check and Carefully clean the interior

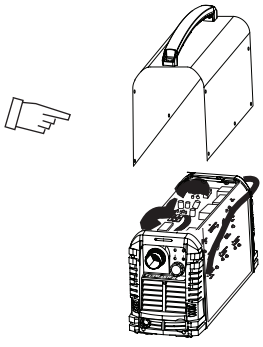

Art # A-09343_AC

A. Every three months

Check external air filter, replace if necessary.

1. Shut off input power; turn off the gas supply. Bleed down the gas supply. Check air filter and replace if necessary.

NOTE

Leave internal ground wire in place.

B. Every six months

1. Check the in-line air filter(s), clean or replace as required.
2. Check cables and hoses for leaks or cracks, replace if necessary.
3. Check all contactor points for severe arcing or pits, replace if necessary.
4. Vacuum dust and dirt out of the entire machine.

5.02 Basic Troubleshooting Guide



WARNING

There are extremely dangerous voltage and power levels present inside this unit. Do not attempt to diagnose or repair it unless you are an accredited service provider and you have had training in power electronics measurement and troubleshooting techniques.

Common Faults symptom LED Indicators

A. AC indicator ~ OFF

1. Main input power cord does not connect to power distribution net.
    a. Connect the power cord.
2. Power ON/OFF switch in OFF (down) position.
    a. Turn switch to ON (up) position.
3. Actual input voltage does not correspond to voltage of unit.
    a. Verify that the input line voltage is correct.
4. Faulty components in unit
    a. Return for repair or have qualified technician repair per service manual.

B. AC indicator ~ blinking

1. Indicator blinking (1 sec ON/1 Sec OFF, Gas may also pulse 3 times).
    a. Check for missing torch parts or not properly installed. Turn ON/OFF switch to OFF position and restart the machine by turning the power switch to ON.
2. Indicator blinking (1 sec ON/3 Sec OFF).
    a. Check for worn or sticking torch parts. Replace if necessary.

3. Indicator blinking (3 sec ON/3 Sec OFF).

    a. Torch switch was depressed before machine was completely powered up. Turn ON/OFF switch to OFF position and the restart the machine by turning the power switch to ON.

C. Air indicator  OFF

1. Gas pressure too low. Check supply pressure.

D. TEMP indicator  ON, (AC indicator ~ ON)

1. Unit air flow obstructed.

    a. Check for blocked air flow around the unit and correct condition.

2. Fan blocked.

    a. Check for blocked status and correct condition.

3. Unit is overheated.

    a. Keep the machine plugged in and turned on for five minutes. This will allow the fan to run and cool the machine.

4. Faulty components in unit

    a. Return for repair or have qualified technician repair per service manual.

E. Torch will not pilot, when torch trigger is activated.

1. Faulty parts in torch

    a. Check torch parts per section 4.02; replace as needed.

2. Gas pressure too low

    a. Adjust supply pressure to proper setting value.

3. Faulty components in unit

    a. Return for repair or have qualified technician repair per service manual.

F. No cutting output when torch is activated; AC indicator ~ ON, gas flows, fan turns.

1. Torch is not connected properly to power supply.

    a. Check torch connection to power supply.

2. Working cable not connected to work piece, or connection is poor.

    a. Make sure that work cable has a proper connection to a clean, dry area of the work piece.

3. Faulty components in unit

    a. Return for repair or have qualified technician repair per service manual.

4. Faulty torch

    a. Return for repair or have qualified technician repair.

G. Torch cuts but not adequately

1. Incorrect setting of output current control

    a. Check and adjust to proper setting.

2. Working cable connection to work piece is poor.
    a. Make sure that work cable has a proper connection to a clean, dry area of the work piece.
3. Faulty components in unit
    a. Return for repair or have qualified technician repair.

H. Output is restricted, and can not be controlled.

1. Input or output connection is poor.
    a. Check all input and output connection leads.
2. Working cable connection to work piece is poor.
    a. Make sure that work cable has a proper connection to a clean, dry area of the work piece.
3. Faulty components in unit
    a. Return for repair or have qualified technician repair per service manual.

I. Cutting output is unstable or inadequate at 120V operation.

1. Low or fluctuating input voltage
    a. Turn output current to minimum (20 amps) and suggest using 20A Drag tip.
    b. Connect to a dedicated input line voltage.
    c. Have electrician check input line voltage under load.
2. Input or output connection is poor
    a. Check all input and output connection leads.
2. Working cable connection is poor.
    a. Make sure that work cable has a proper connection to a clean, dry area of the work piece.

J. Hard to startup

1. Torch parts worn (consumables)
    a. Turn off input power, remove shield cup, tip, start cartridge, and electrode and check them all. If the electrode or cutting tip is worn out, replace them. If the start cartridge does not move freely, replace it. If there is too much spatter on shield cup, replace it.

K. Arc goes out while operating. Arc can't be restarted when torch trigger is activated.

1. Power Supply is overheated (TEMP indicator  ON).
    a. Let unit cool down for at least 5 minutes. Make sure the unit has not been operated beyond duty cycle limit.
2. Fan blades blocked (TEMP indicator  ON).
    a. Check and clear blades.
3. Air flow blocked
    a. Check for blocked air flow around the unit and correct condition.
4. Gas pressure is too low. (Air indicator  ON when torch trigger is activated.)
    a. Check gas source. Adjust to proper setting value.

5. Torch parts worn

    a. Check torch shield cup, cutting tip, start cartridge and electrode. Replace as needed.

6. Faulty component in unit

    a. Return for repair or have qualified technician repair per service manual.

L. Torch cuts but not well.

1. Current control is set too low.

    a. Increase the current setting.

2. Torch is being moved too fast across work piece

    a. Reduce cutting speed.

3. Excessive oil or moisture in torch

    a. Hold torch 1/8 inch (3 mm) from clean surface while purging and observe oil or moisture buildup (do not activate torch). If there are contaminants in the gas, additional filtering may be needed.

4. Torch parts worn

    a. Check torch shield cup, cutting tip, start cartridge and electrode. Replace as needed.

M. Gas in torch pulsates 3 times and then stops. AC indicator light blinking.

1. Torch parts not properly installed in torch. There may have been an attempt to remove torch parts without turning off ON/OFF power switch to OFF on unit.

    a. Check to make sure torch parts are properly installed.

    b. Turn ON/OFF switch to OFF and then back to ON.

This page left blank intentionally.

SECTION 5 TORCH: SERVICE

5T.01 General Maintenance

NOTE

Refer to Previous "Section 5 System" for common and fault indicator descriptions.

Cleaning Torch

Even if precautions are taken to use only clean air with a torch, eventually the inside of the torch becomes coated with residue. This buildup can affect the arc initiation and the overall cut quality of the torch.

WARNING

Disconnect primary power to the system before disassembling the torch or torch leads.

DO NOT touch any internal torch parts while the AC indicator light of the Power Supply is ON.

The inside of the torch should be cleaned with electrical contact cleaner using a cotton swab or soft wet rag. In severe cases, the torch can be removed from the leads and cleaned more thoroughly by pouring electrical contact cleaner into the torch and blowing it through with compressed air.

CAUTION

Dry the torch thoroughly before reinstalling..

5T.02 Inspection and Replacement of Consumable Torch Parts

WARNING

Disconnect primary power to the system before disassembling the torch or torch leads.

DO NOT touch any internal torch parts while the AC indicator light of the Power Supply is ON.

Remove the consumable torch parts as follows:

NOTE

The shield cup holds the tip and starter cartridge shield cup in place. Position the torch with the shield cup facing upward to prevent these parts from falling out when the cup is removed.

1. Unscrew and remove the shield cup from the torch.

NOTE

Slag built up on the shield cup that cannot be removed may effect the performance of the system.

2. Inspect the cup for damage. Wipe it clean or replace if damaged.

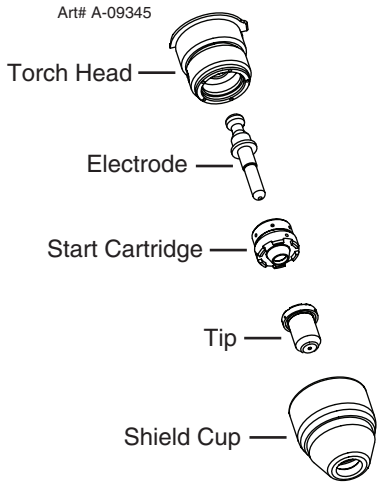

Consumable Parts

3. Remove the tip. Check for excessive wear (indicated by an elongated or oversized orifice). Clean or replace the tip if necessary.

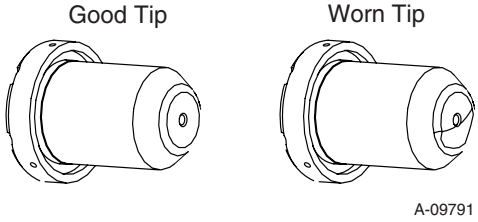

Tip Wear

4. Remove the starter cartridge. Check for excessive wear, plugged gas holes, or discoloration. Check the lower end fitting for free motion. Replace if necessary.

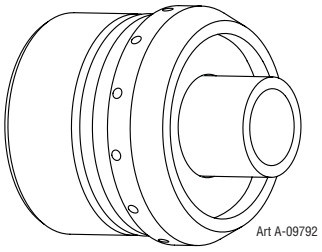

5. Pull the electrode straight out of the torch head. Check the face of the electrode for excessive wear. Refer to the following figure.

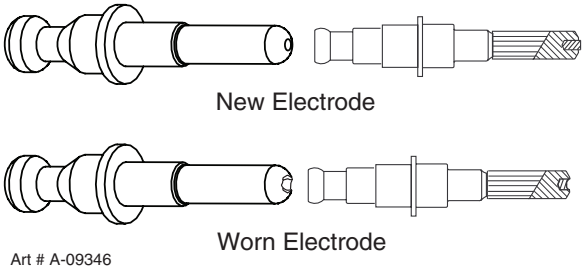

Electrode Wear

6. Reinstall the electrode by pushing it straight into the torch head until it clicks.
7. Reinstall the desired starter cartridge and tip into the torch head.
8. Hand tighten the shield cup until it is seated on the torch head. If resistance is felt when installing the cup, check the threads before proceeding.

SL40 Replacement Parts

Item #	Description	Cat. No
1	Electrode	9-0096
2	Start Cartridge	9-0097
3	Tip, 20A Drag	9-0091
	Tip, 40A Drag	9-0093
	Tip, 40A Standoff	9-0094
4	Shield Cup	9-0098
N/S	SL40 Torch w/ 15ft (4.6m) leads	7-0040

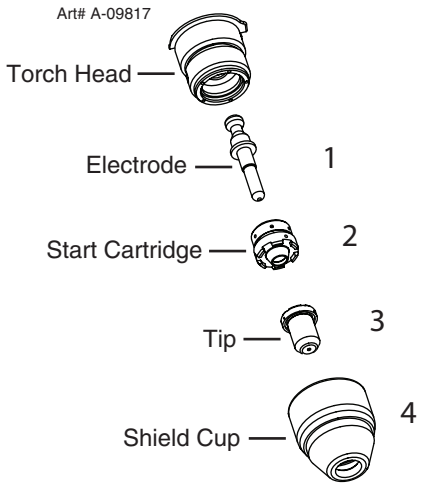

SECTION 6:
PARTS LISTS

6.01 Introduction

A. Parts List Breakdown

The parts list provides a breakdown of all replaceable components.

B. Returns

If a product must be returned for service, contact your distributor. Materials returned without proper authorization will not be accepted.

C. Ordering Information

Order replacement parts by catalog number and complete description of the part or assembly, as listed in the parts list for each type item. Also include the model and serial number of the torch. Address all inquiries to your authorized distributor.

6.02 Power Supply Replacement Parts

Item #	Qty	Description	Catalog #
1	1	Logic PCB assembly	9-0076
2	1	Control PCB assembly	9-0077
3	1	Main PCB assembly	9-0079
4	1	Regulator	9-0081
5	1	Solenoid assembly	9-0082
6	1	Pressure Switch	9-0075
7	1	Front Panel with Label	9-0071
8	1	Rear Panel with Label	9-0072
9	1	Cover with Labels	9-0080
10	1	Hall Current Sensor	9-0088
11	1	CM42 Cutting Control Knob	9-0073
12	1	CM42 On/Off Switch	9-0074
13	1	ATC Connection	9-0083
14	1	Fan	9-0042
15	1	AC/DC Rectifier	9-0049
16	1	Power Cord	9-0025
17	1	CM42 Carry Case (not shown)	9-0084
18	1	Gloves (not shown)	9-0086
19	1	Glasses (not shown)	9-0087
20	1	Replacement Torch (not shown)	7-0040
21	1	15A Power Cord Adapter(not shown)	9-0026
22	1	20A Power Cord Adapter(not shown)	9-0048

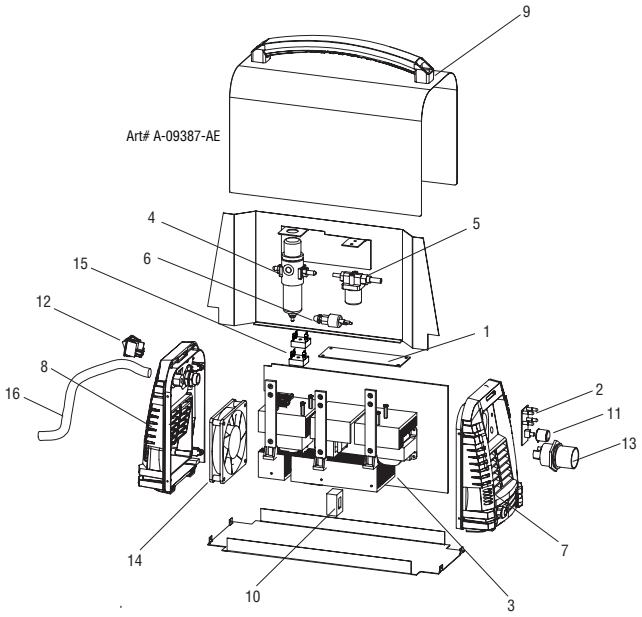

APPENDIX 1:
CIRCUIT DIAGRAM

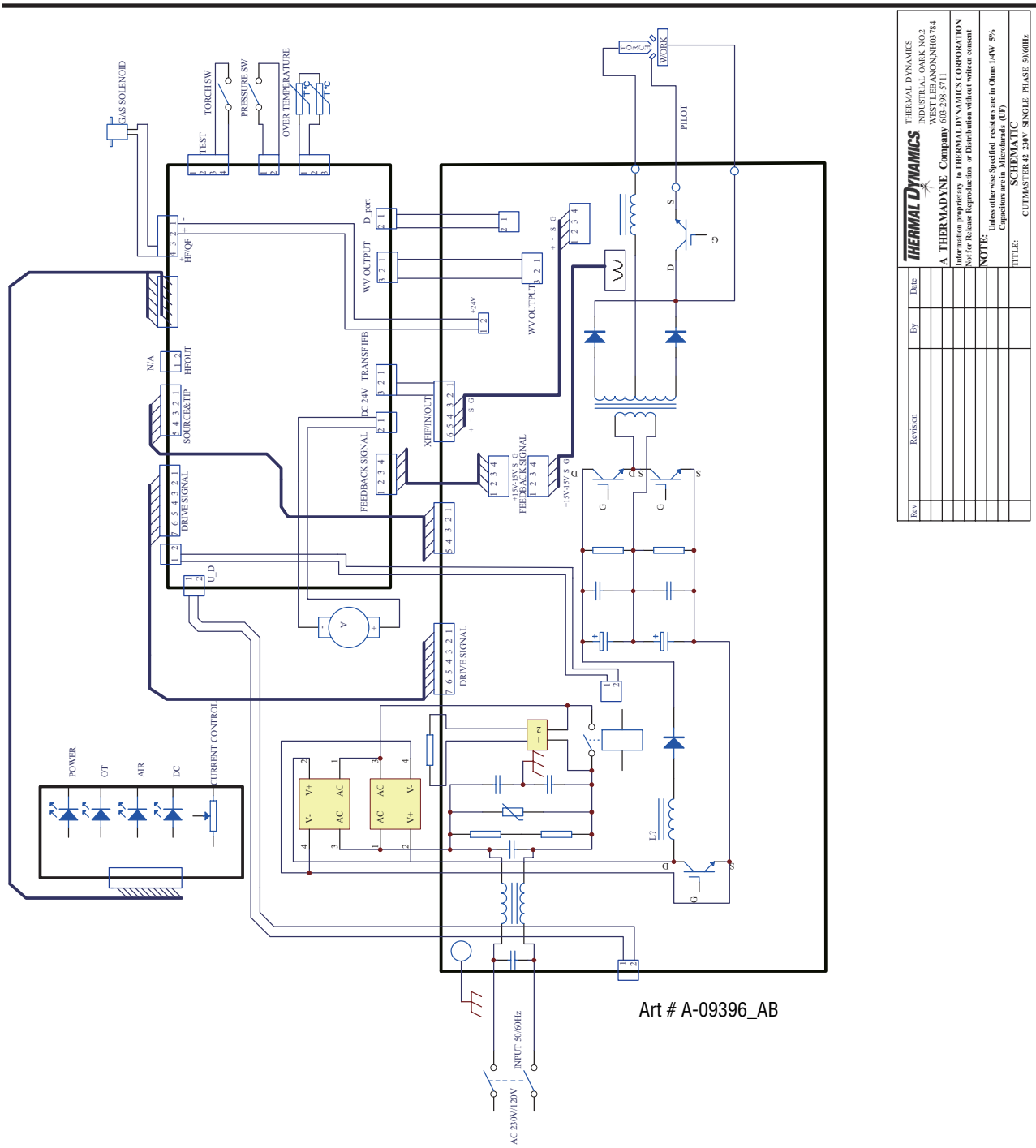

Art # A-09396_AB

This page left blank intentionally.

This Page Intentionally Blank.

U.S. Customer Care: 800-426-1888 / FAX 800-535-0557 • Canada Customer Care: 905-827-4515 / FAX 800-588-1714
International Customer Care: 940-381-1212 / FAX 940-483-8178 • www.thermal-dynamics.com

THERMADYNE®

A Global Cutting & Welding Market Leader™

WORLD HEADQUARTERS: 16052 Swingley Ridge Road, Suite 300 • St. Louis, Missouri 63017 U.S.A.

THE AMERICAS

Denton, TX USA
U.S. Customer Care
Ph: 1-800-426-1888 (tollfree)
Fax: 1-800-535-0557 (tollfree)
International Customer Care
Ph: 1-940-381-1212
Fax: 1-940-483-8178

Miami, FL USA
Sales Office, Latin America
Ph: 1-954-727-8371
Fax: 1-954-727-8376

Oakville, Ontario, Canada
Canada Customer Care
Ph: 1-905-827-4515
Fax: 1-800-588-1714 (tollfree)

EUROPE

Chorley, United Kingdom
Customer Care
Ph: +44 1257-261755
Fax: +44 1257-224800

Milan, Italy
Customer Care
Ph: +39 0236546801
Fax: +39 0236546840

ASIA/PACIFIC

Cikarang, Indonesia
Customer Care
Ph: 6221-8990-6095
Fax: 6221-8990-6096

Rawang, Malaysia
Customer Care
Ph: +603 6092-2988
Fax: +603 6092-1085

Melbourne, Australia
Australia Customer Care
Ph: 1300-654-674 (tollfree)
Ph: 61-3-9474-2988
Fax: 61-3-9474-7391
International
Ph: 61-3-9474-7508
Fax: 61-3-9474-7488

Shanghai, China
Sales Office
Ph: +86 21-64072626
Fax: +86 21-64483032

Singapore
Sales Office
Ph: +65 6832-8066
Fax: +65 6763-5812

Form No. 63-10xx (8/26/10)
© 2010 Thermadyne Industries, Inc.

Printed in U.S.A.